STAFF REPORT
COMPREHENSIVE PLAN/ZONING MAP AMENDMENT
AND SITE PLAN REVIEW

Zone Change application submitted: April 24, 2014
Application deemed incomplete: May 23, 2014
Application deemed complete: June 18, 2014
120-day deadline extended 30 days on June 26, 2014
Site Plan Review application submitted: July 31, 2014
120-day deadline: November 15, 2014

April 17, 2020

To: Planning Commission
From:
RE: File No.

I. BACKGROUND INFORMATION:

A. **REQUEST:** A Comprehensive Plan/Zoning Map Amendment to rezone approximately 3.12 acres of land off of 30th St

B. **APPLICANT FOR ZONE CHANGE:** Integrity Building and Construction LLC

C. **APPLICANT FOR SITE PLAN REVIEW:** Integrity Building and Construction LLC

D. **PROPERTY OWNER: Alice Wilson**

E. **PROPERTY LOCATION:** The property is located at the corner of 30th St and Prospect on the South end and 100' North of 30th and Montello. Tax Lot Description: 03N10E34A00200 See attached Plat map

F. **AFFECTED PROPERTY SIZE:** 3.12

G. **SITE ZONING AND LAND USES:** The subject property is zoned R-1

H. **SITE ZONING HISTORY:**

I. **SURROUNDING ZONING AND LAND USES:**
1. North: R-2 Houses
2. South: R-2 Houses
3. West: R-1 Vacant land
4. East: R-1 Houses

J. **APPLICABLE HOOD RIVER MUNICIPAL CODE (HRMC) CRITERIA:**
1. HRMC Section 17.08.040 – Quasi-Judicial Zone Change Criteria
2. HRMC Section 17.08.050 – Transportation Planning Rule (Quasi-Judicial)??
3. HRMC Section 17.09.040 – Quasi-Judicial Review Procedures
4.
5.
6. HRMC 17.04 – Supplementary Provisions??
7. HRMC 17.16 – Site Plan Review
8. HRMC 17.17 – Landscaping and Development
9. HRMC 17.20 – Transportation Circulation and Access Management

K. **AGENCY COMMENTS:** Notice of the subject application was sent to

L. **ADJACENT PROPERTY OWNER COMMENTS:** Property owners within 250 feet of the subject properties were notified of this request. The following comments were submitted in response to the notice:
1.

M. **APPLICATION HISTORY:**
1.

N. **ATTACHMENTS:**
1. Attachment "A.1" – Subdivision and Zone change narrative
2. Attachment "A.2" – Vicinity and Existing Zoning Map
3.
4. Attachment "A.4" – Transportation Impact Analysis
5. Attachment "B.1" – Preliminary Plan Set
6. Attachment "B.2" – Geo Tech Report
7. Attachment "B.3" – Construction Drawings (preliminary)
8. Attachment "C" – BLA recorded
9. Attachment "D" – Preliminary Plat Map
10. Attachment "E" –
11. Attachment "F" –

II. FINDINGS OF FACT AND CONCLUSIONS OF LAW

A. HRMC 17.08 – ZONE CHANGES AND PLAN AMENDMENTS

HRMC 17.08.030 – Quasi- Judicial Zone Changes and Plan Amendments: A quasi-judicial zone or plan change may be initiated only by the application(s) of the owner(s) or authorized agent of the subject property.

A. An application for a quasi-judicial zone or plan change shall be submitted to the City Planning Department. The application shall include
   1. The applicable fee.
   2. A statement by the applicant explaining the proposed zone or plan change, including existing zoning and proposed zoning.
   3. The tax map of the area being considered for a zone or plan change, indicating boundaries, existing zoning, and existing comprehensive plan designation;
   4. A copy of a document showing ownership of the subject property, and if the applicant is not the owner, a letter of authorization from the owner;
   5. A vicinity map showing the subject property and the surrounding parcels, together with their current zoning;
   6. The reason(s) for requesting the zone change;
   7. Existing site conditions, including but not limited to: topography, public facilities and services, natural hazards, natural areas, open space, scenic and historic areas, transportation, and present use of the site;
   8. An explanation of how the zone change complies with the Comprehensive Plan and criteria in this chapter;
   9. A statement of the potential effect(s) of the zone or plan change on the site; and
   10. If an exception to a goal is required, applicant shall submit documentation establishing compliance with Oregon Revised Statute ORS 197.732 and any applicable Oregon Administrative Rules.

FINDINGS: The submitted application materials include the fee and information in order to address these requirements (Attachments "A.1" - "A.4"). The applicant provided an explanation of how the proposed zone change complies with the Comprehensive Plan in TIA Attachment A.4

B. The Planning Director shall schedule at least one (1) public hearing on the application for zone or plan changes before the Planning Commission. The Planning Commission shall forward its recommendation to the City Council, which shall approve, approve with conditions, or deny the application.

FINDINGS: A public hearing will be held before the Planning Commission, and the Planning Commission will forward a recommendation to the City Council. The City Council will approve, approve with conditions, or deny the application in accordance with these requirements.

C. The application shall not be approved unless the proposed zone or plan change would be in compliance with the Comprehensive Plan and the criteria set forth in this chapter.

FINDINGS: Findings regarding compliance with the Comprehensive Plan and applicable criteria are addressed below in this report.

D. Hearings under this chapter may be held only after required notification and shall be conducted in conformance with the *Review Procedures* (Chapter 17.09).

FINDINGS: Notices were mailed to agencies, utility providers and affected property owners in conformance with the Review Procedures of HRMC 17.09 including the Notice of Hearing requirements specified in HRMC 17.09.040 (G).

<u>HRMC 17.08.040 - Quasi-Judicial Zone Changes and Plan Amendment Criteria:</u>

A. Quasi-Judicial zone or plan changes may be approved if the change will not be unreasonably harmful or incompatible with existing uses and one or more of the following exist:
   1. A mistake was made in the original zone or plan designation; or
   2. There is a public need for the change, and this identified need will be served by changing the zone or plan designation for the subject property(ies); or
   3. Conditions have changed within the affected area, and the proposed zone or plan change would therefore be more suitable than the existing zone or plan designation.

FINDINGS: The proposed rezone affects approximately 3.12 acres of land located at the corner of 30th St and Prospect on the South end and 100' North of 30th and Montello. Tax Lot Description: 03N10E34A00200 See attached Plat map

The proposed tract of land is surrounded by R-2 zoned developed neighborhoods on the North, South and East ends and R-1 vacant land to the West. As such the proposed zone change will not be unreasonably harmful or incompatible with existing uses.

The proposal is intended to facilitate much needed housing within Hood River city limits.

The proposed zone change from R-1 to R-2 complies with this criterion because it will not be unreasonably harmful or incompatible with existing uses and because there is a need for housing density.

B. The hearing body shall consider factors pertinent to the preservation and promotion of the public health, safety, and welfare, including, but not limited to:
   1. The character of the area involved;
   2. It's peculiar suitability for particular uses;
   3. Conservation of property values; and
   4. The direction of building development.

FINDINGS:

The City needs housing

<u>HRMC 17.08.050 – Transportation Planning Rule (Legislative or Quasi-Judicial)</u>

A. Zone changes and amendments to the comprehensive plan and land use regulations which significantly affect a transportation facility shall assure that allowed land uses are consistent with the function, capacity, and level of service of the facility identified in the Transportation System Plan. This shall be accomplished by one of the following:
   1. Limiting allowed land uses to be consistent with the planned function of the transportation facility;
   2. Amending the Transportation System Plan to ensure that existing, improved, or new transportation facilities are adequate to support the proposed land uses consistent with the requirement of the Transportation Planning Rule;
   3. Altering land use designations, densities, or design requirements to reduce demand for automobile travel and meet travel needs through other modes;
   4. Amending the Transportation System Plan to modify the planned function, capacity or performance standards of the transportation facility.

FINDINGS: The proposed zone change affects approximately 3.12 acres of land.

Based on the provided reasonable worst-case development scenarios under existing and proposed zones, the proposed zone change satisfies Oregon's Transportation Planning Rule.

No amendments to the Transportation System Plan are proposed or recommended. Land uses permitted following the proposed zone change are expected to be consistent with the function and capacity of affected transportation facilities.
As such, the proposed zone change is not expected to significantly affect a transportation facility consistent with these requirements. Findings addressing effects on transportation facilities also are provided below.

B. A plan or land use regulation amendment significantly affects a transportation facility if it:
   1. Changes the functional classification of an existing or planned transportation facility;
   2. Changes standards implementing a functional classification system;
   3. As measured at the end of the planning period identified in the adopted transportation system plan or, when evaluating highway mobility on state facilities, as measured at the end of the 20 year planning horizon or a planning horizon of 15 years from the proposed date of the amendment adoption, whichever is greater:

a. Allows types or levels of land use that would result in levels of travel or access that are inconsistent with the functional classification of a transportation facility;
b. Would reduce the level of service of the facility below the minimum acceptable level identified in the Transportation System Plan; or
c. Worsen the performance of an existing or planned transportation facility that is otherwise projected to perform below the minimum acceptable performance standard identified in the TSP or comprehensive plan.

FINDINGS: The proposed zone change does not affect the functional classification of May St, urban collector, Frankton Rd, urban collector, 30th st, future minor arterial, Rand rd, urban collector. As such the proposed zone changes will not significantly affect a transportation facility.

Hood River's functional classification system is addressed in Chapter 3 of the Transportation System Plan (TSP), dated October, 2011. The functional classification system provides direction for the management and design of streets in the city. The TSP includes a functional classification map (Figure 5), management objectives and typical roadway standards. The proposed zone change does not change standards implementing a functional classification system.

The applicant submitted a Traffic Assessment Letter comparing reasonable worst-development scenarios on the subject property under the existing from Urban Low-Density Residential Zone (R-1) to Urban Standard Density Residential Zone (R-2).
The proposed development is estimated to generate a total of 13 trips during the morning peak hour, 18 trips
during the evening peak hour, and 170 trips each weekday. A summary of the trip generation for the proposed
development is shown in Table 4. Attachment "A.4"

As such the proposed plan amendment does not significantly affect a transportation facility.

C. Traffic Impact Analysis. A Traffic Impact Analysis or Traffic Assessment Letter shall be submitted with a plan or land use regulation amendment or a zone change application. (See Section 17.20.060 Transportation Impact Analysis).

FINDINGS: The applicant submitted a Traffic Impact Assessment (Attachment "A.4") addressing reasonable worst-case development scenarios as requested by the City of Hood River.

B. Urban Low-Density Residential Zone (R-1)

A. **Permitted Uses.**
1.

FINDINGS:

B. **Permitted Uses Subject to Site Plan Review.**
1.

FINDINGS

D. **Site Development Requirements.**
1. Minimum Lot Area: 5000 sqft

2. Minimum frontage: Fifty (50) feet on a dedicated public street

FINDINGS: All lots have 50' frontage

E. **Setback Requirements.** Minimum Setbacks:
Front: 10'
Back 10'
Side 5'
Garage 20'

FINDINGS: All structures will conform to R-2 setback requirements. Houses off of Prospect and South side of Montello will have rear loading garages from the alley.

F. **Maximum Building Height.** Twenty-Eight (28) feet

FINDINGS: All buildings will be 28' or under

G. **Parking Regulations.**
1. Each Dwelling unit shall be provided with at least two (2) parking spaces on the buildinf site, one (1) of which may be in the required front yard setback area.
2. Parking spaces utilizing access from a public dedicated alley may be located within the setback area.
3. All parking areas and driveways shall be hard surfaced prior to occupancy, under the following circumstances:
   a. New construction
   b. Change of use
   c. New parking area
4. Bicycle parking as required by 17.20.040

FINDINGS: Each dwelling unit will have garages and driveway parking.

H. **Lighting.** Artificial lighting shall be subdued and shall not shine, cause glare, or be unnecessarily bright on surrounding properties. Both interior and exterior lighting shall take into consideration the viewshed and shall be dimmed as much as possible after closing without compromising safety and security. Flood lights on poles higher than fifteen (15) feet shall not be permitted.

FINDINGS: Per the HRES, street lighting is required at intersections, mid-block, and at a maximum spacing of 300 feet. Street light shielding, and intensity shall

I. **Signs.** All signs shall be in conformance with the sign regulations of this title.

FINDINGS: There will be no signs

J. **Landscaping.** All landscaping shall be in conformance with the landscape standards in this title.

FINDINGS: Street Trees shall be required per the HRMC 16.12.050 –
Street trees at a spacing of 30' on center

C. INTERCHANGE AREA MANAGEMENT PLAN OVERLAY ZONE – HRMC 17.03.120

NOT SURE IF ANY OF THIS IS APPLICABLE ??

The purpose of the IAMP Overlay Zone is the long-range preservation of operational efficiency and safety of the highway interchanges within the City of Hood River, which provides access from and to Interstate 84 for residents and businesses throughout the city. The interchanges are a vital transportation link for regional travel and freight movement and provide connectivity between the east and west side of the community and to employment and recreational opportunities at the waterfront. Preserving capacity and ensuring the safety of these interchanges and the local transportation systems in their vicinity is essential to visitors, residences, and existing businesses as well as to the continued economic vitality along the Columbia River and to community growth and development in the vicinity of the interchanges.

A. Boundary: The boundary of the IAMP Overlay Zone is shown on the City of Hood River Zoning Map and also is depicted in the respective IAMP documents. The zone's boundary generally corresponds with a 1/2 –mile buffer area around the interstate highway interchanges. The Overlay Zone is applied to two boundary areas - one centered at Exit 62 and the other encompassing both Exit 63 and Exit 64.

FINDINGS: The subject property is located in the boundary of the IAMP Overlay Zone for Interstate 84 Exits 63 and 64, and is located in Access Management Block "I".

B. Applicability: The provisions of this section shall apply to any Administrative, Quasi-judicial, or Legislative land use application pursuant to Section 17.09 that is for a parcel wholly or partially within the IAMP Overlay Zone, as defined by Section 17.03.120.A. Any conflict between the standards of the IAMP Overlay Zone and those contained within other chapters of the Zoning Ordinance shall be resolved in favor of this chapter and the applicable requirements in Chapter 17.20, Transportation Circulation and Access Management.

FINDINGS: The subject application is being processed through a Quasi-Judicial Review process. Access is not proposed directly to 2nd Street and the existing access points serving the site on Anchor Way and Portway Ave. are located far enough away from 2nd Street intersections to avoid turning conflicts. As such there is no conflict between this chapter and other chapters of the zoning ordinance. Chapter 17.20 is addressed below.

C. Permitted Land Uses: Uses allowed in the underlying zoning district are allowed subject to other applicable provisions in the Zoning Ordinance and in Title 16, Subdivision Ordinance.

FINDINGS: Findings in this decision address consistency between the proposed light industrial use (warehouse) and applicable standards of the zoning ordinance.

D. Comprehensive Plan and Zoning Map and Text Amendments: This Section applies to all Comprehensive Plan Map and Zoning Map amendments to parcels wholly or partially within the IAMP Overlay Zone and code amendments that affect development within the IAMP Overlay Zone.

In addition to meeting the requirements of Section 17.08.020, applications for Comprehensive Plan amendments, Zoning Map amendments, or development regulation amendments shall meet the

requirements of the Transportation Planning Rule, Oregon Administrative Rule (OAR) 660-012-0060, including making a determination whether or not the proposed change will significantly affect an existing or planned transportation facility.

FINDINGS: The applicant proposes a Comprehensive Plan/Zoning Map amendment. Findings are presented above addressing requirements of the Transportation Planning Rule, Oregon Administrative Rule (OAR) 660-012-0060, including a determination the proposed change will not significantly affect an existing or planned transportation facility.

E. **IAMP Review and Update**: The IAMP document must be reviewed and possibly updated in association with a proposed change to the Hood River Comprehensive Plan, Plan Map, or implementing zoning ordinances that will have a "significant affect" on one or more I-84 Interchanges pursuant to OAR 660-12-0060.
   a. An IAMP update is required when the findings and conclusions from an IAMP review demonstrate the need for an update to the plan in order to mitigate identified impacts to interchange facilities. The agency or person(s) proposing the change shall be responsible for reviewing and initiating an update to the applicable IAMP(s), consistent with the procedures outlined in the IAMP.
   b. An updated IAMP that results from a City-initiated review process pursuant to Section 17.03.120.E, shall be legislatively adopted, requiring a City Council public hearing, as an amendment to the City of Hood River Transportation System Plan and also will be adopted by the Oregon Transportation Commission as an update to the Oregon Highway Plan.

      FINDINGS: Findings from an IAMP review have not demonstrated the need for an update of the IAMP Exit 63/64 document.

D. CHAPTER 17.04 – SUPPLEMENTARY PROVISIONS

17.04.050 Fences and Walls.

A. Fences and walls not more than six (6) feet in height are permitted within or on all property lines and on corner lots or parcels when vision clearance requirements are met.
B. Height is measured from original ground elevation in accordance with the City Engineering Standards.
C. A fence that is six (6) feet or less as measured from original ground elevation in accordance with City Engineering Standards, is not considered a structure for purposes of setbacks established in this title.
D. All retaining walls are considered structures from purposes of setbacks, and may not be located within the front, side or rear setback for a building except as provided in this title.

FINDINGS: Fences are not depicted on the Preliminary Plan Set. If fencing is needed in the future, it will need to be installed in a manner that meets applicable city standards.

17.04.060 Retaining Walls.

A. Retaining walls less than four (4) feet in height are permitted within or on all setback lines when the retaining wall retains earth on the parcel on which the retaining wall is built.
B. If more than one retaining wall is located within the setback, the distance between each wall must be equal to the height of both walls, and the area between the walls must be landscaped.
C. There shall be no more than 4' of exposed wall face on a retaining wall within a setback adjacent to a public right-of-way.
D. One retaining wall of any height may be located within or on all property lines if the wall retains earth on the adjoining parcel and, if on a corner lot or parcel, when vision clearance requirements are met.

E. Height is measured from original ground elevation in accordance with the City Engineering Standards.
F. The limitations on location and height of retaining walls in this title do not apply to retaining walls located within the public right of way for the purpose of constructing or maintaining the public right of way.

FINDINGS: Retaining walls will be addressed in final engineered construction drawings after preliminary approval.

E. CHAPTER 17.16 – SITE PLAN REVIEW

17.16.010 Applicability.

A. A site plan review permit shall be required for the following circumstances:
   1. New construction.
   2. Expansion, remodel, or exterior alteration of any building or other structure.
   3. Change of use.
   4. Multi-family and group residential.
   5. Removal or fill of over 5,000 cubic yards of land.

B. Exemptions from site plan review are as follows;
   1. Any activity that does not require a building permit and is not considered by the Director to be a change in use.
   2. Any activity on the exterior of a building that does not exceed ten percent (10%) of the structure's total cost, fair market value, or $75,000, whichever is less, as determined by the building official.
   3. Interior work which does not alter the exterior of the structure or effect parking standards by increasing floor area.
   4. Normal building maintenance including the repair or maintenance of structural members.
   5. All residential development, except multi-family and group residential, as provided above.

FINDINGS: The proposal features new construction of SFR and duplexes. As such, site plan review is required. The proposal does not qualify for an exemption to the site plan review process.

17.16.020 Application Procedure. The Planning Director shall review all site plan review applications. However, if the Director determines that an application is unusually complicated or contentious due to site constraints or due to the complexity of the project, the Director may request the Planning Commission to review the application.

The City shall process a site plan review application in accordance with the following procedures:

A. **Pre-Application Conference**
   1. An applicant for a site plan review permit shall meet with the City staff at a required pre-application conference to assist in the permit processing.
   2. An applicant may submit an application for a site plan review permit at any time after completion of a required pre-application conference. The applicant shall submit a complete application as specified in *Submittal Requirements* of this chapter, listed below.

   FINDINGS: The Planning Director met with the applicant on several occasions and is in favor of a rezone and subdivision.

B. **Application Review**.

1. Administrative Review
   a. Upon receipt of a complete application, the Director may determine, based on the complexity of the proposal, that it is appropriate for City staff to review the application administratively and make a recommendation to the Director. The final decision on an application is made by the Director based on the following:
      (1) The recommendation of the City staff,
      (2) Consideration of any public comments received; and
      (3) The decision criteria in this chapter.
         (a) Administrative site plan review will require an additional noticing requirement. The Notice of Application shall be published in the local newspaper of record.
2. Quasi-Judicial Review
   a. A site plan review application requiring Planning Commission review and decision shall be reviewed by City staff prior to the final decision by the Planning Commission in accordance with the following procedure:
   b. The Director shall forward a completed application to City staff.
   c. City staff shall consider the application and make recommendation to the Director.
   d. The Director shall review the staff recommendation and determine the major issues and specific aspects of the project, which the Planning Commission should review.
   e. The Planning Commission shall review the application in relationship to staff recommendations. The Planning Commission shall consider the application at a public meeting.
   f. The Planning Commission will make the final decision based on the following:
      (1) The recommendation of City staff;
      (2) Consideration of any public comments received;
      (3) The decision criteria in this chapter.

FINDINGS: The applicant requested review of the proposed subdivision concurrently with an application to rezone the subject property. As such, the application has been processed in accordance with HRMC 17.09.040, Quasi Judicial Actions.

17.16.030 Submittal Requirements. The site plan shall be drawn to scale and indicate all of the following:

1. Dimensions and orientation of the parcel.
2. Locations and heights of buildings and structures, both existing and proposed. Scaled elevation drawings and photographs shall be required.
3. Location and layout of parking and loading facilities, including bicycle parking as required pursuant to 17.20.040;
4. Location of points of entry and exit for pedestrians and motor vehicles, and internal circulation patterns in compliance with the requirements of Chapter 17.20.
5. Location of existing and proposed walls and fences and indication of their height and materials.
6. Proposed location and type of exterior lighting.
7. Proposed location and size of exterior signs.
8. Site specific landscape plan including percentage of total net area.
9. Location and species of trees greater than six (6) inches in diameter when measured four (4) feet above the ground and an indication of which trees are to be removed.
10. Contours mapped at two (2) foot intervals. (five [5] foot contours may be allowed on steep slopes).
11. Natural drainage.
12. Other significant natural features.

13. Legal description of the lot.
14. Percentage of the lot covered by any and all proposed and remaining structures to include asphalt concrete and Portland Cement Concrete.
15. Locations and dimensions of all easements and nature of the easements.
16. Service areas for uses such as loading and delivery.
17. Grading and drainage plan.
18. Other site elements that will assist in the evaluation of site development.
19. A statement of operations with a brief narrative on the nature of the activity, including
    a. Number of employees;
    b. Method of import and export;
    c. Hours of operation including peak times; and
    d. Plans for future expansion.

FINDINGS: The submitted application materials generally address submittal requirements. As addressed in this report, conditions of approval are recommended requiring submission of additional information where necessary. As conditioned, the application is consistent with these requirements.

17.16.040 Site Plan Review Decision Criteria

A. **Natural Features: Significant natural features shall be protected to the maximum extent feasible. Where existing natural or topographic features are present, they shall be used to enhance the development; the use of small streams in the landscaping design, rather than culvert and fill. Existing trees and large woody plants shall be left standing except where necessary for building placement, sun exposure, safety or other valid purpose. Vegetative buffers should be left along major street or highways, or to separate adjacent uses. The use should have minimal adverse impacts on the land and water quality. Possible impacts to consider may include; pollution, soil contamination, siltation, and habitat degradation or loss.**

   FINDINGS: The applicant submitted a topographic survey depicting the location, approximately size and genus of existing trees on the site. There are no other significant natural or topographic features on the site.

B. **Air Quality: The use shall have minimal or no adverse impact on air quality. Possible impacts to consider include smoke, heat, odors, dust, and pollution**.

   FINDINGS: . The proposal is not expected to have an adverse impact on air quality and the proposal is consistent with this criterion.

C. **Grading: Any grading, contouring on-site surface drainage, and/or construction of on-site surface water storage facilities shall take place so that there is no adverse effect on neighboring properties, public rights-of-way, or the public storm drainage system. Graded areas shall be replanted as soon as possible after construction to prevent erosion. A construction erosion control plan shall be required.**

   FINDINGS: The Preliminary Grading and Drainage Plan depicts existing and proposed grades as well as finish-floor elevations . The plan depicts the locations of proposed catch basins that are intended to capture stormwater and prevent adverse effects on neighboring properties and rights-of-way. A stormwater management plan is required demonstrating compliance with city standards .

In order to ensure conformance with these requirements **conditions of approval are recommended that contouring for on-site surface drainage and/or construction of on-site surface water storage facilities shall take place so that there is no adverse effect on neighboring properties, public rights-of-way, or the public storm drainage system. Graded areas shall be replanted as soon as possible after construction to prevent erosion. A construction erosion control plan shall be provided in conformance with the city's engineering standards.** As conditioned, the proposal complies with this criterion.

D. **Public Facilities: Adequate capacity of public facilities for water, sanitary sewers, storm drainage, fire protection, streets, and sidewalks shall be provided to the subject parcel. Development of on-site and off-site public facilities necessary to serve the proposed use shall be consistent with the Comprehensive Plan and any adopted public facilities plan(s). Underground utilities shall be required. Connection to Oregon Department of Transportation (ODOT) stormwater facilities will require a permit from ODOT District 2C. On-site detention or treatment of stormwater may be required by ODOT.**

FINDINGS: Existing public and private utilities are depicted on the Topographic Survey. Findings regarding adequacy of public facilities are as follows:

<u>Water and Sanitary Sewer</u>

- City water is available in 30th St. and the connection should be made to the 10"
- water line. The developer shall field verify the potential connection configuration to
- ensure there is no conflict with existing pipes. The water line must be constructed to City
- Standards, be eight inch (8") minimum, and dedicated to the City. Waterlines not located
- in a public ROW must be located within a 20 foot easement dedicated to the City.
- Maintain a minimum ten foot (10') separation from sewer lines and a minimum two foot
- (2') separation between all utilities in the ROW. The water line must be looped through
- the development and shall be in a dedicated easement under an all-weather drivable
- surface.
- a. 8" waterline required down Montello Ave. to the western property boundary and
- loop an 8" waterline through the north-south street from Montello Ave. to the 10"
- waterline in Prospect Ave.

<u>Storm Sewer</u>

The Preliminary Grading and Drainage Plan depicts the locations of proposed catch basins The City Public Works/Engineering Department submitted the following comments in regard to stormwater facilities and recommended conditions of approval are in **bold** type:

- **A Storm Water Management Plan is required as per City Engineering Standards**.
- **Sizing of all pipes must meet the City's Stormwater Utility Capital Facilities Plan (CFP).**
- See City of Hood River Engineering Standards Section 4.5 Stormwater Management for design and submittal criteria.

<u>Streets and Sidewalks</u>

Currently the site is accessed from 30th st. The preliminary plans anticipate aligning with the existing streets of Prospect and Montello going West.
There will be an alley for rear loaded garages for houses off of Prospect And South side of Montello, as per City Planning request.
The applicant submitted a Transportation Assessment Letter prepared by a professional engineer detailing the number of PM Peak Hour Trips expected to be generated by the proposed subdivision and rezone.

General

HRMC 17.16.040, Public Facilities, and HRMC 12.05.010(E) require the property owner to place utilities underground. The city public works and engineering department submitted the following comments (Attachment "E") and recommended conditions of approval are in **bold** type:

- **All utilities shall be placed underground including power, phone, cable television and other telecommunications lines**.
- **All City water, sanitary, and or storm sewer pipes and appurtenances located outside of a dedicated public right of way must be located within a recorded easement on a form provided by the City. All easements must meet the requirements of the City Engineering Standards**.
- **The Oregon Department of Environmental Quality requires a National Pollutant Discharge Elimination System (NPDES) 1200 – C permit for all projects that disturb one acre or more. Contact the Bend regional DEQ office at 541-388-6146 for permit application forms and more information**.
- **Design and construction of public facilities must meet the requirements of the City of Hood River Engineering Standards**. A copy of the Engineering Standards is available at the City Public Works office or on line at www.ci.hood-river.or.us.
- **Prior to any site work a Construction Site Permit is required**.
- A pre – submittal meeting is recommended prior to the engineered design of any public facilities. **Prior to issuance of the building permit plans stamped by an engineer licensed in Oregon must be provided for review and approval by the City Engineering Department**.
- **All fees, bonds, and insurance must be provided as per the City of Hood River Engineering Standards**.

Police and Fire

Public fire- and police protection currently serve the site because it is inside the city limits.
.**Conditions of approval are recommended that the applicant shall demonstrate compliance with the requirements of the Fire Chief prior to occupancy.**

As conditioned, the proposal is consistent with this criterion.

E. **Traffic and Circulation:** The following traffic standards shall be applicable to all proposals:
   1. Traffic Impact Analysis: The applicant will be required to provide a Traffic Impact Analysis prepared by an Oregon licensed traffic engineer or a Transportation Assessment Letter pursuant to Section 17.20.060.

FINDINGS: The applicant submitted a Transportation Assessment Letter prepared by a professional engineer, Attachment "A.4".

F. **Storage: All outdoor storage areas and garbage collection areas shall be screened through the use of vegetative materials or appropriate fencing.**

FINDINGS: No outside storage is proposed

H. **Compatibility: The height, bulk, and scale of buildings shall be compatible with the site and buildings in the surrounding area. Use of materials should promote harmony with surrounding structures and sites.**

FINDINGS: For site plan review purposes, the "surrounding area" is determined by examining the area of impact of the proposed use based on its location, size, design and operating characteristics. In some cases, the surrounding area may not extend beyond the notice area, in other cases; the surrounding area may encompass an entire neighborhood or large portions of the City. In all cases, the surrounding area is defined geographically.

The surrounding area is residential, SFH or duplexes.

I. **Design: Variety of detail, form and siting should be used to provide visual interest. A single uninterrupted length of facade shall not exceed 100 feet. Buildings shall utilize at least three of the following architectural elements to provide architectural variety: massing, offsets, materials, windows, canopies, pitched or terraced roof forms, or other architectural elements.**

FINDINGS: The single family houses and duplexes will be stick built, under 28', have asphalt shingles and engineered painted siding.

As such, the proposal is consistent with this criterion.

J. **Orientation: Buildings shall have their orientation toward the street rather than the parking area, whenever physically possible.**

FINDINGS: Each dwelling unit will face the street and have rear access. Dwelling units on the North side of Montello will face and load off of Montello. As such, the proposal is in general conformance with these requirements.

17.16.060 Effect of Approved Site Plan Review Permit. No building or development of any sort shall occur to the approved site plan review permit except as follows:

1. Minor adjustments to an approved site plan review permit may be made after review and approval by the Director. Minor adjustments are those that entail minor changes in dimensions or siting of structures and location of public amenities, but do not entail changes to the intensity or character of the use.
2. Major adjustments to an approved site plan review permit require a new or amended application, as determined by the Director. Major adjustments are those that change the basic design, intensity, density, use, and the like.

FINDINGS: Any new construction on the site shall be consistent with the Findings of Fact and Conditions of Approval in this decision, unless the applicant requests a minor or major adjustment.

17.16.070 Expiration and Extension

A. The site plan review permit is valid for a period of two (2) years from the written Notice of Decision, or the decision on an appeal, whichever is later.
B. A single one (1) year extension may be granted by the Director prior to the expiration date if the applicant can demonstrate that circumstance or conditions not known, or foreseeable, at the time of original application warrant an extension of the permit. The extension request must be received by the department no later than thirty (30) days prior to the expiration of the permit.

FINDINGS: In order to ensure compliance with these requirements, **conditions of approval are recommended that this site plan review permit is valid for a period of two (2) years from the written Notice of Decision, or the decision on an appeal, whichever is later. A single one (1) year extension may be granted by the Director prior to the expiration date if the applicant can demonstrate that circumstance or conditions not known, or foreseeable, at the time of original application warrant an extension of the permit. The extension request must be received by the department no later than thirty (30) days prior to the expiration of the permit.**

17.16.080 Appeal. Final decisions on site plan review may be appealed in accordance with the provisions of *Appeal Procedures* (Chapter 17.09).

FINDINGS: The notice of decision associated with this application will detail the appeal process in conformance with HRMC 17.09.030(J).

F. CHAPTER 17.17 – LANDSCAPING AND DEVELOPMENT STANDARDS

17.17.020 Procedure

A. A preliminary or conceptual landscaping plan shall be submitted to the planning Director at the time of application. The Planning Director shall review all landscaping plans for compliance with the provisions of this ordinance and notify the property owner of deficiencies in a submitted plan.
B. A building permit shall not be issued until a final landscaping plan has been approved by the Planning Director.
C. The required landscaping shall be in place prior to issuance of a certificate of occupancy.
D. A property owner shall be responsible for the establishment and maintenance of landscaping. All required landscaped areas shall be maintained according to the approved landscaping plan.

FINDINGS: The applicant submitted a preliminary landscaping plan **Conditions of approval are recommended that all approved landscaping shall be installed or guaranteed prior to occupancy of the building. The owner shall be responsible for the establishment and maintenance of all landscaping in accordance with the approved landscaping plan.** As conditioned, the proposal complies with these standards.

17.17.030 Contents of Landscaping Plan. A landscaping plan submitted to the Planning Director as required by this ordinance shall identify the placement and type of plant materials to provide an effective means for evaluating whether the chosen plant materials will:

1. Survive in the climate and soils of the proposed site; and
2. Satisfy the functional objectives of landscaping as detailed in this ordinance, including erosion control, screening, and shade, within a reasonable time.

FINDINGS: The preliminary landscaping plan indicates that plants will consist of a mix of native and decorative species. Some landscaped areas may be used to accommodate stormwater. In order to ensure compliance with these requirements, **conditions of approval are recommended that all plant materials shall be chosen to survive in the climate and soils of the proposed site, and to satisfy the functional objectives of landscaping as detailed in HRMC 17.17 including erosion control, screening and provision of shade within a reasonable time.** As conditioned, the proposal complies with these standards.

17.17.040 General Landscaping Standards. The following landscaping standards shall apply:

1. The property owner shall be responsible for any future damage to a street, curb, or sidewalk caused by landscaping.
2. Landscaping shall be selected and located to deter sound, filter air contaminants, curtail erosion, contribute to living privacy, reduce the visual impacts of large buildings and paved areas, screen, and emphasize or separate outdoor spaces of different uses or character.
3. Landscaping in parking areas shall be planted in combination along the perimeter and in the interior of the lot and shall be designed to guide traffic movement and lessen the visual dominance of the lot.
4. Plants that minimize upkeep and maintenance shall be selected.
5. Plants shall complement or supplement surrounding natural vegetation and fit the climate.
6. Plants chosen shall be in scale with building development.
7. Minimum landscaping as a percent of gross site area shall be as follows:

ZONE/USE	PERCENT
Residential	?

8. Deciduous trees shall have straight trunks, be fully branched, have a minimum caliper of one and one-half (1½) inches and be adequately staked for planting.
9. Evergreen trees shall be a minimum of three (3) feet in height, fully branched and adequately staked for planting.
10. Shrubs shall be a minimum eighteen (18) inches in height and spaced not more than four (4) feet apart for planting.
11. Ground cover, defined as living material and not including bark chips or other mulch, shall be planted on a maximum eighteen (18) inches on center between plants and rows.
12. Watering systems shall be installed to assure landscaping success. If plantings fail to survive, it is the responsibility of the property owner to replace them.
13. Trees shall not be planted closer than twenty-five (25) feet from the curb line of intersections of streets or alleys, and not closer than ten (10) feet from private driveways (measured at the back edge of the sidewalk), fire hydrants, or utility poles.
14. Street trees shall not be planted closer than twenty (20) feet to light standards. Except for public safety, no new light standard location should be positioned closer than ten (10) feet to any existing street tree, and preferably, such locations will be at least twenty (20) feet distant.
15. Trees shall not be planted closer than two and one-half (2½) feet from the face of the curb except at intersections, where it should be five (5) feet from the curb in a curb return area.
16. Where there are overhead power lines, tree species that will not interfere with those lines shall be chosen.
17. Trees shall not be planted within two (2) feet of any permanent hard surface paving or walkway. Sidewalk cuts in concrete for trees shall be at least four (4) feet by four (4) feet; however, larger cuts are encouraged because they allow additional air and water into the root system and add to the health of the tree. Space between the tree and such hard surface may be covered by permeable non-permanent hard surfaces such as grates, bricks on sand, paver blocks, cobblestones, or ground cover.

18. Trees, as they grow, shall be pruned to their natural form to provide at least eight (8) feet of clearance above sidewalks and twelve (12) feet above street roadway surfaces.
19. Existing trees may be used as street trees if there will be no damage from the development which will kill or weaken the tree. Sidewalks of variable width and elevation may be utilized to save existing street trees, subject to approval by the City Engineer.
20. Vision clearance hazards shall be avoided. Refer to Diagram "A" – Vision Clearance, Section 17.09.040.
21. City or State right-of-way(s) can not be used to satisfy the required landscaping requirement.
22. Landscaping in the Central Business district and the Heights Business District can include street amenities such as park benches and planter boxes.

FINDINGS:

17.17.060 Violation. Failure to comply with the standards subsequent to issuance of the building permit for new construction shall constitute a violation of these regulations and be subject to the penalty and abatement proceedings in the *Severability – Penalties* chapter (Chapter 17.10).

FINDINGS: Failure to comply with the standards subsequent to issuance of the building permit for new construction shall constitute a violation of these regulations and be subject to the penalty and abatement proceedings in the *Severability – Penalties* chapter (Chapter 17.10).

G. CHAPTER 17.20 - TRANSPORTATION CIRCULATION AND ACCESS MANAGEMENT

Might need some help here

17.20.010 Applicability. This chapter implements the City's adopted Transportation System Plan and the requirements of the Transportation Planning Rule (OAR 660-12). The standards of this chapter are applicable to all proposed improvements to the public transportation system and to all development on the public transportation system.

FINDINGS: The public transportation system will be affected by the traffic traveling to and from the site and, as such, the standards of this chapter are applicable.

17.20.020 Definitions. This section incorporated into Section 17.01.060 – Definitions.

FINDINGS: Interpretations of text in this section shall be consistent with the definitions in HRMC 17.01.060.

17.20.030 Access Management Standards. This section shall apply to all development on arterials and collectors within the City and UGA and to all properties that abut these roadways as part of site plan review process (Chapter 17.16). Within the Interchange Area Management Plan Overlay Zone's "Access Management Blocks," this section also applies to local streets and roads and abutting properties.

FINDINGS: The site does have direct access to a designated Arterial Street.

A. **Site Plan Review Procedures.** All site plans are required to be submitted for review pursuant to the provisions of this title and shall show:
   1. Location of existing and proposed access point(s) on both sides of the road where applicable;

2. Distances to neighboring constructed access points, median openings (where applicable), traffic signals (where applicable), intersections, and other transportation features on both sides of the property;
3. Number and direction of lanes to be constructed on the driveway plus striping plans;
4. All planned transportation features (such as sidewalks, bikeways, auxiliary lanes, signals, etc.);
5. Parking and internal circulation plans including walkways and bikeways; and
6. A detailed description of any requested variance and the reason the variance is requested.

FINDINGS: The Preliminary Site Plan depicts the location of access points off of 30th st.

B. **Criteria.** All site plans shall comply with the following access criteria:
1. All proposed roads shall follow the natural topography and preserve natural features of the site as much as possible. Alignments shall be planned to minimize grading.
2. Access shall be properly placed in relation to sight distance, driveway spacing, and other related considerations, including opportunities for joint and cross access.
3. The road system shall provide adequate access to buildings for residents, visitors, deliveries, emergency vehicles, and garbage collection.
4. An internal pedestrian system of sidewalks or paths shall provide connections to parking areas; entrances to the development; and open space, recreational, and other community facilities associated with the development. Streets shall have sidewalks on both sides. Pedestrian linkages shall also be provided to the peripheral street system.
5. The access shall be consistent with the access management standards adopted in the Transportation System Plan.
6. Any application that involves access to the State Highway System shall be reviewed by the Oregon Department of Transportation for conformance with state access management standards.

FINDINGS: Prospect Ave and Montello Ave will be extensions of existing city roads. There will be a public alley for rear loading garage access, as requested by Hood River Planning. There will be a north - south alley with half street improvement on the west boundary of property, as requested by Hood River engineering. As addressed above in HRMC 17.16.040, conditions of approval are recommended to provide adequate transportation facilities, and to address the requirements of the City's Public Works and Engineering Departments which ensure compliance with the Transportation System Plan.

C. **Standards.**
1. **Access Spacing:** Driveway accesses shall be separated from other driveways and street intersections in accordance with the standards and procedures of Chapter 13.28.
2. **Joint and Cross Access:**

3. **Driveway Design:** Driveways shall be designed pursuant to the requirements of Chapter 13.28.
4. **Requirements for Phased Development Plans:**
   a. In the interest of promoting unified access and circulation systems, development sites under the same ownership or consolidated for the purposes of development and comprised of more than one (1) building site shall be reviewed as single properties in relation to the access standards of this ordinance. The number of access points permitted shall be the minimum number necessary to provide reasonable access to these properties, not the maximum available for that frontage. All necessary easements, agreements, and stipulations shall be met. This shall also apply to

phased development plans. The owner and all lessees within the affected area are responsible for compliance with the requirements of this ordinance and both may be cited for any violation.

b. All access must be internalized using the shared circulation system of the principal development or retail center. Driveways shall be designed to avoid queuing across surrounding parking and driving aisles.

5. **Nonconforming Access Features:** Legal access connections in place as of November 2001 that do not conform with the standards herein are considered nonconforming features and shall be brought into compliance with applicable standards pursuant to the requirements of 13.28.
6. **Reverse Frontage:** Lots that front on more than one (1) street shall be required to locate motor vehicle accesses on the street with the lower functional classification.

FINDINGS:

NO clue below

D. **Access within Interchange Area Management Plan (IAMP) Overlay Zone.** In addition to the standards and requirements of the Transportation Circulation and Access Management section of this ordinance (Section 16.12 and Section 17.20), parcels wholly or partially within an adopted IAMP Overlay Zone are subject to the Access Management Plan in the applicable IAMP (Exit 62 or Exit 63/64). The following applies to land use and development applications for parcels within an adopted IAMP Overlay Zone that are subject to Chapter 17.16 Site Plan Review or Title 16 Subdivisions and, that are shown as part of an "Access Management Block" subject to the recommendations of the Access Management Plan (see Figure 9, Access Management Blocks, in the Exit 62 IAMP and Figures 10 and 11, Access Management Blocks, in the Exit 63 and 64 IAMP).

1. **Access Approval.**
   a. Access to streets and roads within the IAMP Overlay Zone shall be subject to joint review by the City and the Oregon Department of Transportation (ODOT) and, where applicable, by Hood River County. Coordination of this review will occur pursuant to Section 17.03.120.D. and consistent with requirements of Title 16.12, when applicable.
   b. Approval of an access permit is an Administrative Action and is based on the standards contained in this Section, the provisions of Sections 17.20.030. B. and C., and the Access Management Plan in the applicable IAMP. Where the recommendations of the Access Management Plan conflict with other access management and spacing requirements in Section 17.20.030 of the Zoning Ordinance, the applicable IAMP Access Management Plan shall govern.

2. **Cross Access Agreement.**
   a. Prior to approving access for tax lots that are identified in the Access Management Plan of the applicable IAMP, the City shall require that:
      (1) The applicant demonstrate how cross access can be accomplished for sites contiguous to the subject property or properties, consistent with the circulation and planned local street network shown in the IAMP;
      (2) If access across an adjacent parcel or parcels is necessary for the development of the subject site, a signed cross access agreement is submitted with the application; and,
      (3). For applications reviewed as part of a subdivision approval process, necessary cross access easements are shown and recorded on the final plat. Access widths shall be consistent with City Public Works standards unless based on a Transportation Impact Study, developed pursuant to Section 17.20.060.C.2 and approved by the City Engineer or his/her designee.

3. **Frontage Improvements to Public Streets.** Development application approval will require public street frontage improvements pursuant to the Access Management Plan in the applicable IAMP and City requirements for constructing public improvements, including those in Subdivision Ordinance Section 16.12.060, Public Facilities Standards.

FINDINGS: The subject property is located in the boundary of the IAMP Overlay Zone for Interstate 84 Exits 63 and 64, and is located in Access Management Block "I". The applicant proposes to one new access point and anticipates relocating one access point located immediately east of the site in the future. Direct access to N. 2nd St. is not proposed. Notice of the proposed development was provided to ODOT. The application is being reviewed as an Quasi-Judicial Action. Cross access is anticipated between the subject site and adjacent properties via easements. **As addressed above, a condition of approval is recommended to ensure a shared access easement(s) is recorded prior to occupancy**. As such, the proposal is consistent with these requirements.

17.20.040 Bicycle Parking. All uses that are subject to Site Design Review shall provide bicycle parking, in conformance with the standards in Table 17.20-40-A, and subsections A-H, below.

17.20.050 Standards for Transportation Improvements

A. **Permitted Uses.** Except where otherwise specifically regulated by this ordinance, the following improvements are permitted outright:
   1. Normal operation, maintenance, repair, and preservation activities of existing transportation facilities.
   2. Installation of culverts, pathways, medians, fencing, guardrails, lighting, and similar types of improvements within the existing right-of-way.
   3. Projects specifically identified in the Transportation System Plan as not requiring further land use regulation.
   4. Landscaping as part of a transportation facility.
   5. Emergency measures necessary for the safety and protection of property
   6. Acquisition of right-of-way for public roads, highways, and other transportation improvements designated in the Transportation System Plan except for those that are located in exclusive farm use or forest zones.
   7. Construction of a street or road as part of an approved subdivision or land partition approved consistent with the applicable land division ordinance.

FINDINGS: The proposed use exceeds the scope of these permitted improvements. As such, the standards of HRMC 17.20 are applicable to the proposal.

B. **Uses Subject to Site Plan Review.**
   1. Construction, reconstruction, or widening of highways, roads, bridges or other transportation projects that are
      a. Not improvements designated in the Transportation System Plan; or
      b. Not designed and constructed as part of a subdivision or planned development subject to site plan and/or conditional use review.
   2. An application for site plan review is subject to review under *Site Plan Review* (Chapter 17.16); however, the decision criteria do not apply. In order to be approved, the site plan permit shall comply with the Transportation System Plan and applicable standards of this title, and shall address the criteria below. For State projects that require an Environmental Impact Statement (EIS) or EA

(Environmental Assessment), the draft EIS or EA shall be reviewed and used as the basis for findings to comply with the following criteria:

a. The project is designed to be compatible with existing land use and social patterns, including noise generation, safety, and zoning.
b. The project is designed to minimize avoidable environmental impacts to identified wetlands, wildlife habitat, air and water quality, cultural resources, and scenic qualities.
c. The project preserves or improves the safety and function of the facility through access management, traffic calming, or other design features.
d. Project includes provision for bicycle and pedestrian circulation as consistent with the Comprehensive Plan and other requirements of this ordinance.

3. Street and interchange improvements (defined as parking removal, access modifications in IAMP blocks, new lanes, new streets, signalization modifications). The site plan review shall include findings and solutions addressing safety, mobility, and the effect of traffic beyond the immediate vicinity, pedestrian system, bike system, parking and economic enterprise will be protected and/or enhanced by the proposed. The following facility(ies) shall be considered in the study area for all traffic analysis unless modified by the City Engineer: All access points and intersections signalized and un-signalized adjacent to the proposed site, if the proposed site fronts an arterial collector street the analysis shall address all intersection and driveways along the site frontage and within the access facing distances extending out from the boundary from the site frontage roads through and adjacent to the site. All intersections that receive site generated trips that comprise at least 10% or more of the total intersection volume. All intersections needed for signal progression analysis. In addition to these requirements the City Engineer may determine any additional intersections or roadway links that may be adversely affected as the result of the proposed development."

FINDINGS: The proposed use includes review of the Site Plan Review criteria, as addressed above in this report. As such, the criteria of HRMC 17.20.050 (B.2) do not apply.

17.20.060_Traffic Impact Analysis

A. **Purpose.** The purpose of this section of the code is to implement Section 660-012-0045(2)(e) of the State Transportation Planning Rule that requires the city to adopt a process to apply conditions to development proposals in order to protect and minimize adverse impacts to transportation facilities. This section establishes the standards for when a proposal must be reviewed for potential traffic impacts; when a Traffic Impact Analysis (TIA) must be submitted with an application in order to determine whether conditions are needed to minimize impacts to and protect transportation facilities; what must be in a TIA; and who is qualified to prepare the analysis.
B. **Typical Average Daily Trips and Peak Hour Trips.** The latest edition of the *Trip Generation* manual, published by the Institute of Transportation Engineers (ITE) shall be used as standards by which to gauge average daily and peak hour (weekday and/or weekend) vehicle trips, unless a specific trip generation study that is approved by the City Engineer indicates an alternative trip generation rate is appropriate. A trip generation study may be used to determine trip generation for a specific land use which is not well represented in the ITE Trip Generation Manual and for which a similar facility is available to count.
C. **Applicability and Consultation.** A Traffic Impact Analysis shall be required to be submitted to the city with a land use application when (1) a change in zoning or plan amendment is proposed or (2) a proposed development shall cause one or more of the following effects, which can be determined by field counts, site observation, traffic impact analysis, field measurements, crash history, Institute of Transportation Engineers *Trip Generation*; and information and studies provided by the local reviewing jurisdiction and/or ODOT:

a. The proposed action is estimated to generate 250 Average Daily Trips (ADT) or more, or 25 or more weekday AM or PM peak hour trips (or as required by the City Engineer);
b. An increase in use of adjacent streets by vehicles exceeding the 20,000 pound gross vehicle weights by 10 vehicles or more per day
c. The location of the access driveway does not meet minimum intersection sight distance requirements, or is located where vehicles entering or leaving the property are restricted, or such vehicles queue or hesitate, creating a safety hazard; or
d. The location of the access driveway does not meet the access spacing standard of the roadway on which the driveway is located; or
e. A change in internal traffic patterns that may cause safety problems, such as back up onto public streets or traffic crashes in the approach area.

The applicant shall consult with the City Engineer or his/her designee at the time of a pre-application conference (see Section 17.09.120 Pre-Application Conferences) about whether a TIA is required and, if required, the details of what must be included in the TIA.

D. **Traffic Assessment Letter.** If a TIA is not required as determined by Section 17.20.060.C, the applicant shall submit a Transportation Assessment Letter (TAL) to the City indicating that TIA requirements do not apply to the proposed action. This letter shall present the trip generation estimates and distribution assumptions for the proposed action and verify that driveways and roadways accessing the site meet the sight distance, spacing, and roadway design standards of the agency with jurisdiction of those roadways. Other information or analysis may be required as determined by the City Engineer. The TAL shall be prepared by an Oregon Registered Professional Engineer who is qualified to perform traffic engineering analysis.

The requirement for a TAL may be waived if the City Engineer determines that the proposed action will not have a significant impact on existing traffic conditions.

E. **Traffic Impact Analysis Requirements.**
1. Preparation. A Traffic Impact Analysis shall be prepared by an Oregon Registered Professional Engineer who is qualified to perform traffic engineering analysis and will be paid for by the applicant.
2. Transportation Planning Rule Compliance. See Chapter 17.08.050 Transportation Planning Rule Compliance.
3. Pre-application Conference. The applicant will meet with the City Engineer prior to submitting an application that requires a Traffic Impact Analysis. The City has the discretion to determine the required elements of the TIA and the level of analysis expected.

F. **Study Area.** The following facilities shall be included in the study area for all Traffic Impact Analyses (unless modified by the City Engineer):
1. All site-access points and intersections (signalized and unsignalized) adjacent to the proposed site. If the proposed site fronts an arterial or collector street, the analysis shall address all intersections and driveways along the site frontage and within the access spacing distances extending out from the boundary of the site frontage.
2. Roads through and adjacent to the site.
3. All intersections that receive site-generated trips that comprise at least 10% or more of the total intersection volume.
4. All intersections needed for signal progression analysis.
5. In addition to these requirements, the City Engineer may determine any additional intersections or roadway links that may be adversely affected as a result of the proposed development.

6. Those identified in the IAMP Overlay Zone (see Subsection I).

G. **When a Traffic Impact Analysis (TIA) is required, the TIA shall address the following minimum requirements:**
   1. The TIA was prepared by an Oregon Registered Professional Engineer; and
   2. If the proposed development shall cause one or more of the effects in Section 17.20.060(C), above, or other traffic hazard or negative impact to a transportation facility, the TIA shall include mitigation measures that are attributable and are proportional to those impacts, meet the City's adopted Level-of-Service standards, and are satisfactory to the City Engineer and ODOT, when applicable; and
   3. The proposed site design and traffic and circulation design and facilities, for all transportation modes, including any mitigation measures, are designed to:
      a. Minimize the negative impacts on all applicable transportation facilities; and
      b. Accommodate and encourage non-motor vehicular modes of transportation to the extent practicable; and
      c. Make the most efficient use of land and public facilities as practicable; and
      d. Provide the most direct, safe and convenient routes practicable between on-site destinations, and between on-site and off-site destinations; and
      e. Otherwise comply with applicable requirements of the Hood River Municipal Code.
   4. If the proposed development will increase through traffic volumes on a residential local street by 20 or more vehicles during the weekday p.m. peak hour or 200 or more vehicles per day, the impacts on neighborhood livability shall be assessed and mitigation for negative impacts shall be identified. A negative impact to neighborhood livability will occur where:
      a. Residential local street volumes increase above 1,200 average daily trips; or
      b. The existing 85th percentile speed on residential local streets exceed 28 miles per hour.

H. **Conditions of Approval.** The city may deny, approve, or approve a development proposal with appropriate conditions needed to meet transportation operations and safety standards and provide the necessary right-of-way and improvements to develop the future planned transportation system. Factors that should be evaluated as part of land division and site development reviews, and which may result in conditions of approval, include:
   1. Crossover or reciprocal easement agreements for all adjoining parcels to facilitate future access between parcels.
   2. Access for new developments that have proposed access points that do not meet the designated access spacing policy and/or have the ability to align with opposing access driveways.
   3. Right-of-way dedications for planned roadway improvements.
   4. Street improvements along site frontages that do not have improvements to current standards in place at the time of development.
   5. Construction or proportionate contribution toward roadway improvements necessary to address site generated traffic impacts, i.e. construction or modification of turns lanes or traffic signals.

I. **Traffic analysis within an IAMP Overlay Zone.** All development applications located within an IAMP Overlay Zone that are subject to the provisions of Chapter 17.16 (Site Plan Review) or Chapter 16.08 (Land Divisions) may be required to prepare a Traffic Impact Analysis. City of Hood River Transportation System Plan policies call for the City, in coordination with Hood River County and ODOT, to monitor and evaluate vehicle trip generation impacts at Hood River interchanges and on street systems in interchange areas from development. This requirement will not preclude Oregon Department of Transportation, City of Hood River, or Hood River County from requiring analysis of IAMP study intersections under other conditions. Development approved under this article shall be subject to the following additional requirements.

1. The Traffic Impact Analysis must include an account of weekday p.m. peak hour site generated trips through IAMP study intersections. Intersections impacted by 25 or more weekday p.m. peak hour site generated trips, or weekend peak hour site generated trips, shall be analyzed for level of service and volume to capacity ratio during day of opening conditions.
2. The City shall provide written notification to ODOT and Hood River County when an application concerning property in the IAMP Overlay Zone and subject to Site Plan Review or Title 16 is received. This notice shall include an invitation to ODOT and the County to participate in the City's pre-application conference with the applicant, pursuant to Section 17.09.120.
3. The City shall not deem the land use application complete unless it includes a Traffic Impact Analysis prepared in accordance with the applicable requirements of Section 17.20.060.
4. Pursuant to Section 17.09.030.F, ODOT shall have 14 calendar days from the date a completion notice is mailed to provide written comments to the City. If ODOT does not provide written comments during this 14-day period, the City staff report may be issued without consideration of ODOT comments.
5. Monitoring Responsibilities. The details of monitoring responsibilities will be outlined in the adopted IAMP.

FINDINGS: The applicant submitted a Traffic Impact Analysis prepared by a professional engineer (Attachment "A.4"). The applicant's submittal is based on direction provided by city staff and is generally consistent with the requirements for a Traffic Impact Analysis.

I believe this is where I pass the mic to you and I go to the dance floor

III. <u>CONCLUSION:</u> In association with adoption of the Zoning Ordinance in 1954 and the City of Hood River Comprehensive Plan in 1980, the subject property was zoned Light Industrial. The property was rezoned to General Commercial (C-2) in 1998 in order to facilitate use as an Expo Center, parking lot, Conference Center, Visitor's Center and Chamber of Commerce (Ordinance No. 1762). Conditions have changed and the Port of Hood River no longer operates the Expo Center or Conference Center, and the Chamber of Commerce and Visitor's Center have relocated. Neighboring property owner Hood River Distillers supports the proposed rezone and no opposition to the proposal was submitted prior to completion of the staff report.

The proposed warehouse, to be located on a portion of the rezoned land, is a light industrial use. As such approval of the warehouse contingent upon approval of the proposed zone change from General Commercial (C-2) to Light Industrial (LI). If the zone change is approved, the proposed warehouse is generally consistent with the zoning ordinance. However, conditions of approval are recommended where necessary to ensure compliance with all applicable standards and criteria.

The Preliminary Site Plan notes the location of existing and proposed property lines (Attachment "B.1," Sheet A101), however, the applicant did not request property line adjustments or a replat. As such the Site Plan Review application was reviewed based on existing property line locations. If property lines are adjusted in the future, it is recommended that all parking spaces north of the warehouse should be located on 3N10E25 Tax Lot 126 and designated to serve occupants and clientele of the existing commercial building on that site. Only five parking spaces are required to serve the proposed warehouse based on use by five employees. The commercial building on Tax Lot 126 has insufficient off-street parking as evidenced by an agreement between the Port of Hood River and Key Development Corporation designating easements over 30 parking spaces owned by the Port for use by occupants of the commercial building on Tax Lot 126 (Doc No. 2012-03666). Twenty of the parking spaces on the site located immediately north of the proposed warehouse are subject to this agreement and easement, leaving 19 of the 39 parking spaces on the site for use by warehouse employees.

IV. <u>RECOMMENDATION</u>: Based on the above Findings of Fact, staff recommends the Planning Commission <u>forwards a recommendation of approval of the Comprehensive Plan/Zoning Map Change to the City Council</u>

subject to conditions of approval as drafted below. In addition, staff recommends the Planning Commission approves the Site Plan Review application subject to the following conditions of approval:

Zone Change

1. Approval is for a Comprehensive Plan/Zoning Map Amendment from General Commercial (C-2) to Light Industrial (LI) affecting approximately 2.33 acres of land as depicted on the attached Zone Change Map (Attachment "A.3").

2. Any development or change of use on the portion of the property affected by this zone change that occurs prior to the effective date of this amendment, if approved by the City Council, shall comply with the standards of the General Commercial (C-2) Zone consistent with Ordinance No.1762.

3. Any development or change of use on the portion of the property affected by this zone change that occurs after the effective date of this amendment, if approved by the City Council, shall comply with the standards of the Light Industrial (LI) Zone.

Site Plan Review

Planning Department

4. Approval of the Site Plan Review permit for the warehouse and associated site improvements (Attachment "B.1") is contingent upon approval of the proposed zone change from General Commercial to Light Industrial on 3N10E25 Tax Lot 129 (Parcel 1 of Hood River County Partition Plat 2012-05P, CS No. 2012-031).

5. Prior to issuance of a building permit, the final landscaping plan shall comply with the following requirements:
   - The plan shall verify that a minimum of 10 percent of the site is landscaped.
   - All landscaping materials shall comply with the standards of HRMC 17.17.040. Detailed information about the species, size and location of all proposed landscaping shall be provided on the plan. All plant materials shall be chosen to survive in the climate and soils of the proposed site, and to satisfy the functional objectives of landscaping as detailed in HRMC 17.17 including erosion control, screening and provision of shade within a reasonable time.
   - The plan shall ensure trees are installed in the landscaping planter along the site's northern property line spaced approximately 20 feet on center, avoiding light poles as specified in city standards.
   - The plan shall demonstrate compliance with the vision clearance requirements of HRMC 17.04.130(4) at the intersections of private driveways with public streets.
   - The owner shall be responsible for the establishment and maintenance of all landscaping in accordance with the approved landscaping plan.

6. Prior to issuance of a building permit, the location of exterior lighting shall be specified on the site plan and/or building elevations. All exterior lighting on the site shall be subdued and shall not shine, cause glare, or be unnecessarily bright on surrounding properties. Flood lights on poles higher than fifteen (15) feet shall not be permitted. And, any existing lighting on the site does not comply with these requirements shall be brought into compliance with these requirements prior to occupancy.

7. Any new mechanical equipment shall be screened from view and an adequate sound buffer shall be provided to meet the noise ordinance (HRMC 8.09).

8. Prior to occupancy, the applicant shall provide a minimum of two long-term (i.e. covered or enclosed) bike parking spaces on the site. Racks shall allow frames and wheels to be locked. Bicycle parking shall be at least as well lit as vehicle parking. Areas set aside for bicycle parking shall be clearly marked and reserved for bicycle parking only. Bicycle parking shall not impede or create a hazard to pedestrians. Parking areas shall be located so as to not conflict with vision clearance areas.

9. Prior to occupancy, all approved landscaping shall be installed or guaranteed.

Public Works and Engineering Department

10. Prior to any site work a Construction Site Permit is required.

11. Prior to issuance of the building permit plans stamped by an engineer licensed in Oregon must be provided for review and approval by the City Engineering Department. A pre – submittal meeting is recommended prior to the engineered design of any public facilities.

12. Water and sewer pipe sizes must be consistent with the City's Water Master Plan. See City of Hood River Engineering Standards Section 4.6 Potable Water Systems for design and submittal criteria.

13. There is an existing 2-inch water service available to serve the warehouse parcel that may need to be relocated by the applicant to avoid the proposed driveway location.

14. Relocation of the fire hydrant by the applicant will require abandoning the existing pipe at the connection to the water main and removal of the existing gate valve for the hydrant. The fire hydrant will be required to be installed a minimum of 10 feet from the existing sanitary sewer service line.

15. A Storm Water Management Plan is required as per City Engineering Standards. Sizing of all pipes must meet the City's Stormwater Utility Capital Facilities Plan (CFP). See City of Hood River Engineering Standards Section 4.5 Stormwater Management for design and submittal criteria.

16. Contouring for on-site surface drainage and/or construction of on-site surface water storage facilities shall take place so that there is no adverse effect on neighboring properties, public rights-of-way, or the public storm drainage system. Graded areas shall be replanted as soon as possible after construction to prevent erosion. A construction erosion control plan shall be provided in conformance with the city's engineering standards.

17. The developer shall be responsible for payment of a street degradation fee associated with street cuts based on the age of Anchor Way. The fee, as applicable, must be paid with the Construction Permit fee.

18. A city standard commercial driveway approach will be required. Due to the width, an exception to the maximum width must be approved by the City Council. See City of Hood River Engineering Standards Section 4.4 Roadways for design and submittal criteria.

19. The developer of the warehouse shall contribute a proportionate share of the costs of signalization of the 2nd & Oak intersection consistent with the requirements of Hood River Municipal Code Chapter 3.20. The amount contributed by the developer will be determined using the city's proportionate share study, as approved by the city council, and the findings of the applicant's trip generation letter (Attachment "B.3") assuming 58% of these trips will travel through the 2nd & Oak intersection. The developer shall sign a written agreement to pay the proportionate contribution. The agreement shall be prepared by the City of Hood River. The agreement shall provide that full payment, partial payment or the posting of acceptable

security must be made to the City of Hood River on or before the commencement of any work on and issuance of any permit for the subject property under the development proposal. If payment is not made as required, the city council shall assess the proportionate contribution against the subject property by resolution and shall enter the assessment resolution in the docket of city liens and record the same in the Hood River County Assessor's real property records. If a use which generates more vehicular trips than ITE Code 150 is to occupy a portion of the building on the site, the owner and/or occupant will be required to obtain land-use- and/or building permits for the change of use and to contribute an equivalent proportionate share for that use prior to occupancy.

20. The developer shall be responsible for all costs associated with installing all-way stop control at the 90 degree bend in Anchor Way (or costs for any alternative solution to meet sight distance requirements, if approved by the City Engineer).

21. Prior to occupancy, the applicant shall submit evidence of a recorded access easement(s) between Anchor Way and on-site parking lots. Further, the applicant shall submit evidence of a joint maintenance agreement(s) for the shared driveway(s) defining maintenance responsibilities of property owners.

22. All utilities shall be placed underground including power, phone, cable television and other telecommunications lines.

23. All City water, sanitary, and or storm sewer pipes and appurtenances located outside of a dedicated public right of way must be located within a recorded easement on a form provided by the City. All easements must meet the requirements of the City Engineering Standards.

24. The Oregon Department of Environmental Quality requires a National Pollutant Discharge Elimination System (NPDES) 1200 – C permit for all projects that disturb one acre or more. Contact the Bend regional DEQ office at 541-388-6146 for permit application forms and more information.

25. Design and construction of public facilities must meet the requirements of the City of Hood River Engineering Standards. A copy of the Engineering Standards is available at the City Public Works office or on line at www.ci.hood-river.or.us.

26. All fees, bonds, and insurance must be provided as per the City of Hood River Engineering Standards.

Building and Fire Departments

27. The developer shall demonstrate compliance with the requirements of the Building Official and Fire Chief prior to occupancy.

General

28. Prior to installation of any new signs on the site, a sign permit(s) shall be obtained from the City of Hood River.

29. This approval does not condone nor require interference with existing easements, covenants, deeds or restrictions of record which affect this or adjacent properties.

30. Failure to comply with these conditions will nullify this Site Plan Review permit.

31. This site plan review permit is valid for a period of two (2) years from the written Notice of Decision, or the decision on an appeal, whichever is later. A single one (1) year extension may be granted by the Director prior to the expiration date if the applicant can demonstrate that circumstance or conditions not known, or foreseeable, at the time of original application warrant an extension of the permit. The extension request must be received by the department no later than thirty (30) days prior to the expiration of the permit.

TERRA SURVEYING

PRELIMARY PLAT OF NATURE'S WAY VISTA'S SUBDIVISION

LOCATION OF SURVEY:

TRACTS OF LAND LOCATED IN THE SOUTHEAST QUARTER OF THE NORTHEAST QUARTER OF THE NORTHEAST QUARTER OF SECTION 34, TOWNSHIP 3 NORTH, RANGE 10 EAST, WILLAMETTE MERIDIAN, THE CITY OF HOOD RIVER AND HOOD RIVER COUNTY, OREGON.

HOOD RIVER COUNTY SURVEYOR'S OFFICE

CS# _____

DATE FILED: _____

BY: _____

OWNER:

IBC LLC
P.O. BOX 1904
HOOD RIVER, OREGON
97031

ZONING:

U-R-2
URBAN STANDARD DENSITY RESIDENTIAL

0' 50' 100' 150'

SCALE: 1" = 50'

BASIS OF BEARING:

HOOD RIVER COUNTY SURVEY #2020-005

LOT #	SQ. FT.
TRACT A	2,748
LOT 1	5,296
LOT 2	5,294
LOT 3	5,292
LOT 4	5,290
LOT 5	5,288
LOT 6	5,112
LOT 7	5,057
LOT 8	5,132
LOT 9	5,132
LOT 10	5,132
LOT 11	5,132
LOT 12	5,347
LOT 13	5,397
LOT 14	5,411
LOT 15	5,349
LOT 16	5,288
LOT 17	5,227
LOT 18	5,384

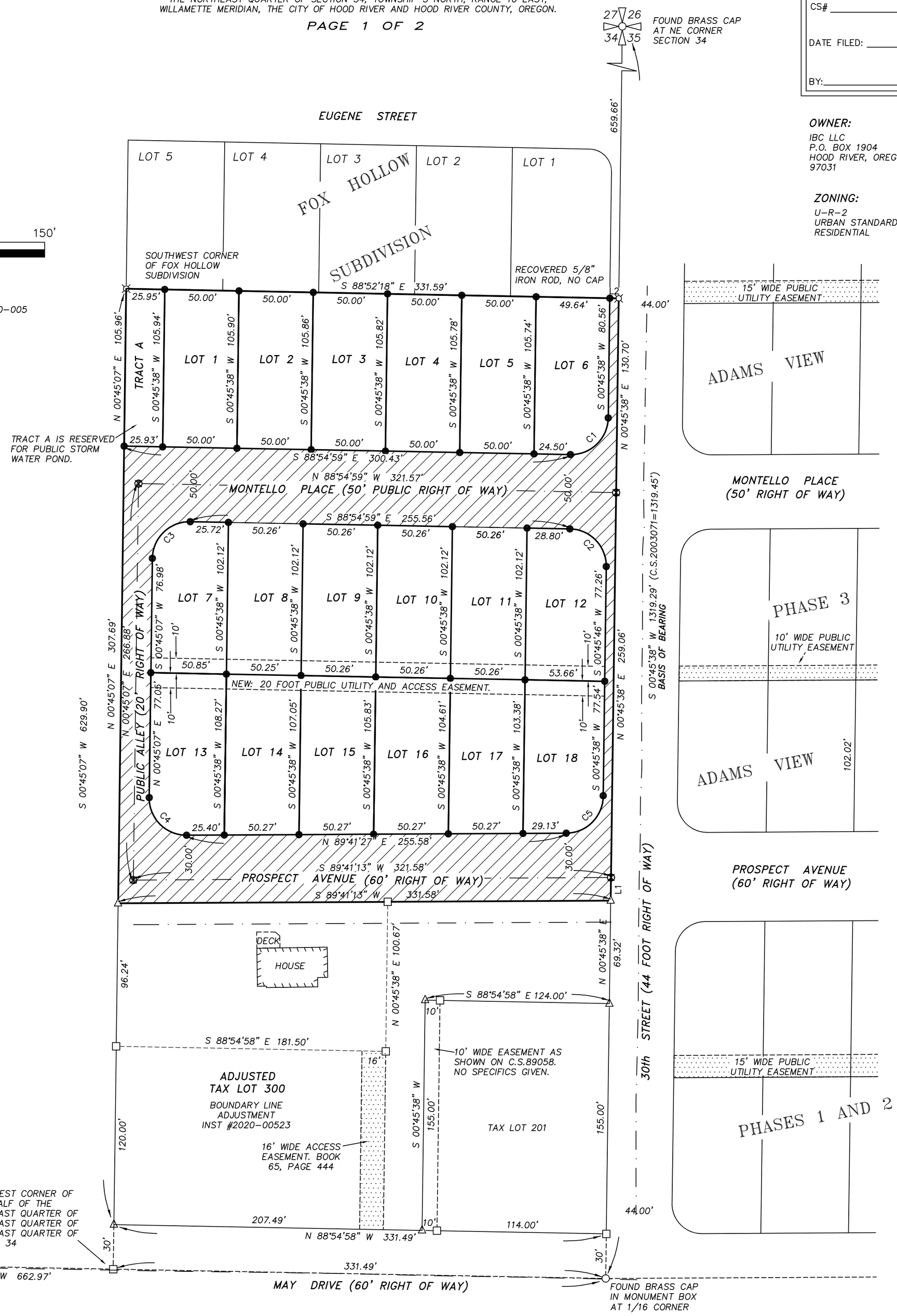

BOUNDARY SYMBOL LEGEND:

- ● SET 5/8" X 30" IRON ROD WITH PLASTIC CAP, (DATE)
- ⊗ SET 1-5/32" DIAMETER COPPER PLUG, L.S. 72306 (DATE)
- ○ FOUND MONUMENT AS NOTED ON PLAT
- △ FOUND 5/8" IRON ROD, L.S.72306 C.S. No. 2020-005
- ⌘ FOUND 5/8" IRON ROD, L.S. 50800, C.S. No. 2003-071
- □ CALCULATED, NOT FOUND OR SET

LINE	BEARING	DISTANCE
L1	N 00°45'38" E	15.55'
L2	N 88°52'18" W	6.00'

CURVE	RADIUS	ARC	CHORD BRG	CHORD LEN.	DELTA
C1	25.00'	39.41'	S 45°55'20" W	35.45'	90°19'23"
C2	25.00'	39.13'	N 44°04'40" W	35.26'	89°40'37"
C3	25.00'	39.41'	N 45°55'04" E	35.46'	90°19'54"
C4	25.00'	39.73'	S 44°46'43" E	35.68'	91°03'40"
C5	25.00'	38.80'	S 45°13'32" W	35.02'	88°55'49"

REGISTERED PROFESSIONAL LAND SURVEYOR

for application

OREGON
December 30, 2005
ERIK M. CARLSON
72306

Expires: December, 2021

TERRA SURVEYING

P.O. BOX 617
HOOD RIVER, OREGON 97031
PHONE: (541) 386-4531
E-Mail: terra@gorge.net

DATE: MAY 4, 2020
PROJECT: 19119PLAT
SCALE: 1" = 50'
ASSESSORS MAP: 3N-10E-34A T.L. 200

TERRA SURVEYING

PRELIMARY PLAT OF NATURE'S WAY VISTA'S SUBDIVISION

LOCATION OF SURVEY:

TRACTS OF LAND LOCATED IN THE SOUTHEAST QUARTER OF THE NORTHEAST QUARTER OF THE NORTHEAST QUARTER OF SECTION 34, TOWNSHIP 3 NORTH, RANGE 10 EAST, WILLAMETTE MERIDIAN, THE CITY OF HOOD RIVER AND HOOD RIVER COUNTY, OREGON.

HOOD RIVER COUNTY
SURVEYOR'S OFFICE

CS# _____

DATE FILED: _____

BY: _____

OWNER:

IBC LLC
P.O. BOX 1904
HOOD RIVER, OREGON
97031

NARRATIVE:

THE PURPOSE OF THIS PLAT IS TO SUBDIVIDE TAX LOT 200 INTO A 18 LOT SUBDIVISION. THE PROPERTY IS DESCRIBED AS A PORTION OF THE EAST HALF OF THE SOUTHEAST QUARTER OF THE NORTHEAST QUARTER OF THE NORTHEAST QUARTER OF SECTION 34. THESE BOUNDARIES WERE LOCATED BY TIEING INTO FOUND BRASS CAPS FOUND AT THE NORTHEAST CORNER OF SECTION 34 AND FOUND AT THE SOUTHEAST CORNER OF THE NORTHEAST QUARTER OF THE NORTHEAST QUARTER AND THE SOUTHWEST CORNER OF THE EAST HALF OF THE NORTHEAST QUARTER OF THE NORTHEAST QUARTER. THE SOUTH LINE 1/64TH LINE WAS MIDPOINT PROTACTED TO DEFINE THE SOUTHWEST CORNER OF THIS PROPERTY. THE NORTHWEST CORNER OF THIS PROPERTY IS THE SOUTHWEST CORNER OF THE FOX HOLLOW SUBDIVISION. THE ADJUSTED PROPERTY IS WITHIN THIS DESCRIBED EAST HALF. THE ADJUSTED PROPERTIES IS SHOWN ON FACE OF THE SURVEY. THE BASIS OF BEARING IS THE TWO BRASS CAPS MONUMENTING THE EAST LINE OF SECTION 34.

SURVEYOR'S CERTIFICATE:

I, ERIK M. CARLSON, REGISTERED LAND SURVEYOR FOR THE STATE OF OREGON, BEING FIRST DULY SWORN, DEPOSED AND SAY THAT I HAVE CORRECTLY SURVEYED THE PROPERTY DESCRIBED IN THE LEGAL DESCRIPTION AND MARKED WITH LEGAL MONUMENTS THE LAND REPRESENTED ON THE PLAT OF "NATURE'S WAY VISTA'S" SUBDIVISION, IN THE CITY OF HOOD RIVER, HOOD RIVER COUNTY, STATE OF OREGON. SAID LAND IS DESCRIBED MORE PARTICULARLY AS FOLLOWS:

THAT PORTION OF THE NORTHEAST QUARTER OF SECTION 34, TOWNSHIP 3 NORTH, RANGE 10 EAST OF THE WILLAMETTE MERIDIAN, COUNTY OF HOOD RIVER AND STATE OF OREGON DESCRIBED AS FOLLOWS:

COMMENCING AT THE SOUTHWEST CORNER OF THE EAST HALF OF THE SOUTHEAST QUARTER OF THE NORTHEAST QUARTER OF THE NORTHEAST QUARTER OF SECTION 34; THENCE NORTH 00°45'07" EAST ALONG THE WEST LINE OF SAID EAST HALF A DISTANCE OF 30.00 FEET TO A 5/8" IRON ROD, L.S.72306 MONUMENTING A POINT OF THE NORTH RIGHT OF WAY OF MAY STREET; THENCE NORTH 00°45'07" EAST A DISTANCE OF 216.24 FEET TO A 5/8" IRON ROD, L.S.72306 TO THE POINT OF BEGINNING OF THE FOLLOWING DESCRIBED TRACT.

THENCE NORTH 00°45'07" EAST ALONG THE WEST LINE OF SAID EAST HALF A DISTANCE 413.66 FEET TO A 5/8" IRON ROD, L.S. 50800 MONUMENTING THE SOUTHWEST CORNER OF LOT 5 OF FOX HOLLOW SUBDIVISION; THENCE SOUTH 88°52'18" EAST A DISTANCE OF 331.59 FEET TO A 5/8" IRON ROD, L.S.72306 ON THE EAST LINE OF SECTION 34; THENCE SOUTH 00°45'38" WEST ALONG SAID EAST LINE A DISTANCE OF 405.31 FEET TO A 5/8" IRON ROD, L.S.72306; THENCE SOUTH 89°41'13" WEST A DISTANCE OF 331.58 FEET TO THE POINT OF BEGINNING OF THIS DESCRIBED TRACT.

THE INITIAL POINT OF THIS PLAT IS A 5/8" IRON ROD, L.S.50800 RECOVERED AT THE SOUTHEAST CORNER OF THE FOX HOLLOW SUBDIVISION C.S. 2003–071.

_____
ERIK M. CARLSON PLS 72306

RECORDING INFORMATION:

PLAT NUMBER: _____

INSTRUMENT RECEIVED ON THE _____ DAY

OF _____, 2020 AT _____ _.M.

_____
HOOD RIVER COUNTY CLERK

APPROVALS:

THE PLAT OF "NATURE'S WAY VISTA'S" SUBDIVISION WAS EXAMINED AND APPROVED BY ME THIS ____ DAY OF _____, 20__.

_____
HOOD RIVER COUNTY SURVEYOR

THE PLAT OF "NATURE'S WAY VISTA'S" SUBDIVISION WAS EXAMINED AND APPROVED BY ME THIS ____ DAY OF _____, 20__.

_____
CITY OF PUBLIC WORKS AND ENGINEERING DIRECTOR

THE PLAT OF "NATURE'S WAY VISTA'S" SUBDIVISION WAS EXAMINED AND APPROVED BY ME THIS ____ DAY OF _____, 20__.

_____
CITY OF HOOD RIVER RECORDER

THE PLAT OF "NATURE'S WAY VISTA'S" SUBDIVISION WAS EXAMINED AND APPROVED BY ME THIS ____ DAY OF _____, 20__.

_____
CITY OF HOOD RIVER PLANNING DIRECTOR

THE PLAT OF "NATURE'S WAY VISTA'S" SUBDIVISION WAS EXAMINED AND APPROVED BY ME THIS ____ DAY OF _____, 20__.

_____
CITY OF HOOD RIVER MAYOR

THE PLAT OF "NATURE'S WAY VISTA'S" SUBDIVISION WAS EXAMINED AND APPROVED BY ME THIS ____ DAY OF _____, 20__.

_____
CHAIRPERSON HOOD RIVER COUNTY COMMISSIONERS

THE PLAT OF "NATURE'S WAY VISTA'S" SUBDIVISION WAS EXAMINED AND APPROVED BY ME THIS ____ DAY OF _____, 20__.

_____
HOOD RIVER COUNTY COMMISSIONER

THE PLAT OF "NATURE'S WAY VISTA'S" SUBDIVISION WAS EXAMINED AND APPROVED BY ME THIS ____ DAY OF _____, 20__.

_____
HOOD RIVER COUNTY COMMISSIONER

THE PLAT OF "NATURE'S WAY VISTA'S" SUBDIVISION WAS EXAMINED AND APPROVED BY ME THIS ____ DAY OF _____, 20__.

_____
HOOD RIVER COUNTY COMMISSIONER

THE PLAT OF "NATURE'S WAY VISTA'S" SUBDIVISION WAS EXAMINED AND APPROVED BY ME THIS ____ DAY OF _____, 20__.

_____
HOOD RIVER COUNTY COMMISSIONER

DECLARATION AND DEDICATION:

I, _____, MANAGING MEMBER OF INTEGRITY BUILDING AND CONSTRUCTION, LLC, DOES HEREBY MAKE, ESTABLISH & DECLARE THE PLAT MAP TO BE A TRUE AND CORRECT MAP OF THE LAND OWNED AND LAID OUT AS THE SUBDIVISION PLAT OF "NATURE'S WAY VISTA'S" AND HAS CAUSED THE SUBDIVISION TO BE PREPARED AND THE PROPERTY SUBDIVIDED IN ACCORDANCE WITH THE PROVISIONS OF ORS CHAPTER 92. SAID LAND BEING MORE PARTICULARLY DESCRIBED IN THE SURVEYOR'S CERTIFICATE HERETO ANNEXED AND SAID OWNER DOES HEREBY DEDICATE PUBLIC ROADS AND PUBLIC AND PRIVATE EASEMENTS AS SHOWN ON SUCH PLAT.

_____
MANAGING MEMBER OF INTEGRITY BUILDING AND CONTRUCTION, LLC.

ACKNOWLEDGMENT:

STATE OF OREGON)
)SS.
COUNTY OF HOOD RIVER)

THIS INSTRUMENT WAS ACKNOWLEDGED BEFORE ME ON THIS ____ DAY OF _____, 2020, BEFORE ME A NOTARY PUBLIC FOR THE STATE OF OREGON, PERSONALLY APPEARED MICHAEL J. KETLER AS MANAGING MEMBER OF INTEGITY BUILDING AND CONSTRUCTION, LLC, BEING FIRST DULY SWORN, SAID THAT HE DID ACKNOWLEDGE THIS INSTRUMENT OF HIS FREE AND VOLUNTARY ACT.

_____
PRINT NAME OF NOTARY

_____
SIGNATURE OF NOTARY

NOTARY PUBLIC– OREGON

COMMISSION NO: _____

MY COMMISSION EXPIRES: _____

APPROVALS:

THE DIRECTOR OF RECORDS AND ASSESSMENTS, AND THE DIRECTOR OF BUDGET AND FINANCE AND TAX COLLECTOR, RESPECTIVELY, OF HOOD RIVER COUNTY, OREGON, HEREBY CERTIFY THAT WE HAVE EXAMINED THE PLAT OF "NATURE'S WAY VISTA'S" IN THE COUNTY OF HOOD RIVER AND THAT THE NAME ADOPTED FOR SAID PLAT IS A PROPER NAME AND NOT INCLUDED IN ANY OTHER SUBDIVISION IN HOOD RIVER COUNTY, AND FURTHER CERTIFY THAT ALL ASSESSMENTS DUE HEREON HAVE BEEN FULLY PAID AS REQUIRED BY LAW AND WE HEREBY APPROVE SAID PLAT.

_____
HOOD RIVER COUNTY DIRECTOR OF BUDGET AND FINANCE, TREASURER/TAX COLLECTOR

_____
HOOD RIVER COUNTY DIRECTOR OF RECORDS AND ASSESSMENTS

REGISTERED
PROFESSIONAL
LAND SURVEYOR

for review

OREGON
December 30, 2005
ERIK M. CARLSON
72306

Expires: December, 2021

REFERENCES:

FILED IN THE COUNTY SURVEYORS OFFICE:
C.S. No. 89058, BOUNDARY SURVEY FOR MARVIN OWEN BY DLC SURVEYING, L.S. 1028, FILED: JUNE 29, 1989.
C.S. No. 95116, PLAT OF "ADAMS VIEW PHASES 1 AND 2" BY TENNESON ENGINEERING CORP., L.S. 872, FILED: DECEMBER 5, 1995.
C.S. No. 2000–061, PLAT OF "ADAMS VIEW SUBDIVISION PHASE 3" BY TENNESON ENGINEERING CORP., L.S. 2786, FILED: JULY 24, 2000.
C.S. No. 2003–071, PLAT OF "FOX HOLLOW SUBDIVISION" BY TENNESON ENGINEERING CORP., L.S. 50800, FILED: NOVEMBER 3, 2003.
C.S. No. 2005–079, RECORD OF SURVEY FOR THE HERITAGE CORPORATION BY KLEIN AND ASSOCIATES, L.S. 932, FILED: OCTOBER 12, 2005.
C.S. No. 2020–050, PROPERTY LINE ADJUSTMENT SURVEY FOR FOSS WILSON BY TERRA, L.S.72306, FEBRUARY 12, 2020.

TERRA SURVEYING

P.O. BOX 617
HOOD RIVER, OREGON 97031
PHONE: (541) 386–4531
E–Mail: terra@gorge.net

DATE: MAY 4, 2020
PROJECT: 19119PLAT
SCALE: 1" = 50'
ASSESSORS MAP: 3N–10E–34A T.L. 200

CONCEPT 2

30TH STREET SUBDIVISION

TAX LOT 200, NE 1/4 OF SECTION 24, TOWNSHIP 3 NORTH,

RANGE 10 EAST, W.M.,

JUNE 2020

INDEX:

SHEET 1	COVER SHEET
SHEET 2	LEGEND AND SECTIONS
SHEET 3	EXISTING CONDITIONS
SHEET 4	LOT LAYOUT
SHEET 5	GRADING & STORM DRAINAGE PLAN
SHEET 6	STORM DRAINAGE FROM THE POND TO HENDERSON CREEK
SHEET 7	SANITARY & WATER PLAN
SHEET 8	FUTURE OVERALL SITE PLAN

VICINITY MAP

NOT TO SCALE

OWNER:

IBC

PO BOX 1904
HOOD RIVER, OREGON 97031
PH: (503) 308-0637
EM: MKETLER.IBC@GMAIL.COM
MIKE KETLER, OWNER

SURVEYOR:

TERRA SURVEYING

1406 12TH STREET - SUITE 100
HOOD RIVER, OREGON 97031
PH. (541) 386-4531
EM: TERRA@GORGE.NET
ERIK CARLSON, PLS

ENGINEER:

HRK ENGINEERING & FIELD SERVICES

489 N 8TH STREET - SUITE 201
HOOD RIVER, OREGON 97031
PH. (541) 386-6480
EM: JJONES@HRKUS.COM
JAMES JONES (PROJECT MANAGER)

APPROVED:

JAMES T. JONES	08/03/2020
PROJECT MANAGER	DATE
JAMES T. JONES	08/03/2020
ENGINEER OF RECORD	DATE

Oregon 811

30TH STREET

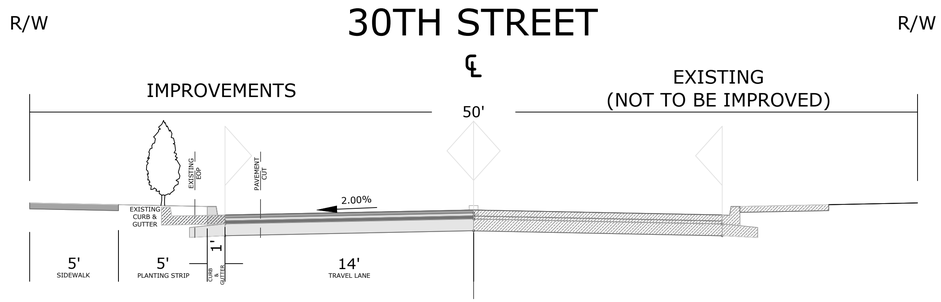

MONTELLO

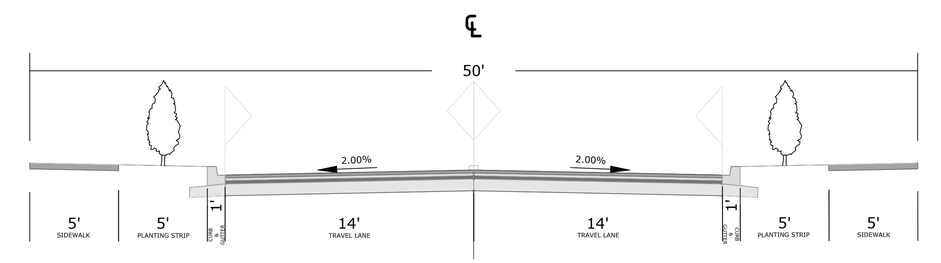

PROSPECT AVENUE

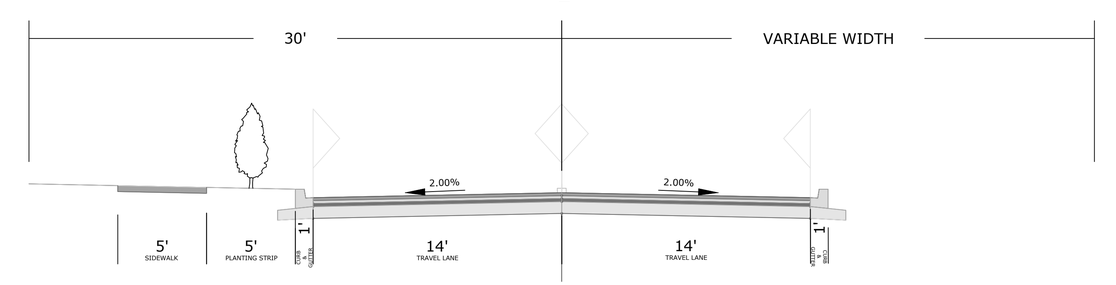

E/W ALLEY

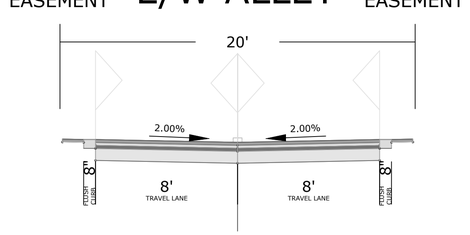

N/S ALLEY

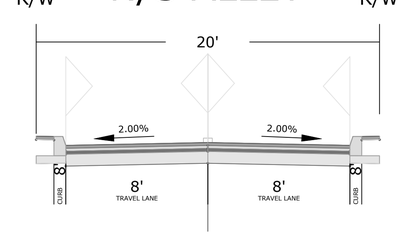

LEGEND:

- EXISTING FLOWLINE
- EXISTING STORM SEWER
- PROPOSED STORM SEWER
- EXISTING CATCH BASIN
- PROPOSED CATCH BASIN
- EXISTING STORM MANHOLE
- PROPOSED STORM MANHOLE
- EXISTING STORM DRAINAGE CLEANOUT
- PROPOSED STORM DRAINAGE CLEANOUT
- EXISTING SANITARY SEWER
- PROPOSED SANITARY SEWER
- EXISTING SANITARY MANHOLE
- PROPOSED SANITARY MANHOLE
- EXISTING SANITARY CLEANOUT
- PROPOSED SANITARY CLEANOUT
- EXISTING WATER LINE
- PROPOSED WATER LINE
- EXISTING FIRE HYDRANT
- PROPOSED FIRE HYDRANT
- EXISTING WATER VALVE
- PROPOSED WATER VALVE
- EXISTING BLOW-OFF VALVE
- PROPOSED BLOW-OFF VALVE
- EXISTING WATER METER
- PROPOSED WATER METER
- EXISTING OVERHEAD ELECTRIC POWER LINE
- PROPOSED OVERHEAD ELECTRIC POWER LINE
- EXISTING UNDERGROUND ELECTRIC POWER LINE
- PROPOSED UNDERGROUND ELECTRIC POWER LINE
- EXISTING POWER POLE
- PROPOSED POWER POLE
- PROPOSED LIGHT POLE
- EXISTING ELECTRIC METER
- PROPOSED ELECTRIC METER
- EXISTING NATURAL GAS LINE
- PROPOSED NATURAL GAS LINE
- EXISTING GAS METER
- PROPOSED GAS METER
- EXISTING UNDERGROUND COMMUNICATION
- PROPOSED UNDERGROUND COMMUNICATION
- EXISTING TELEPHONE RISER
- PROPOSED TELEPHONE RISER
- EXISTING INDEX CONTOUR LINE
- EXISTING CONTOUR LINE
- PROPOSED CONTOUR LINE
- EXISTING FENCE LINE
- PROPOSED FENCE LINE
- PROPOSED SILT FENCE
- PROPERTY LINE
- PROPOSED LOTS

HRK ENGINEERING & FIELD SERVICES
489 N 8TH STREET - SUITE 201
HOOD RIVER, OREGON 97031
(541) 386-6480

	NAME	DATE
DESIGNED	LL	08/03/20
DRAFTED	LL	08/03/20
APPROVED	JTJ	08/03/20

30TH STREET SUBDIVISION
IBC CONSTRUCTION, INC.
3750 MAY DRIVE
HOOD RIVER, OR 97031
PN: 19-059

CONCEPT 2
LEGEND & SECTIONS

DRAWING NO.
2
OF 8

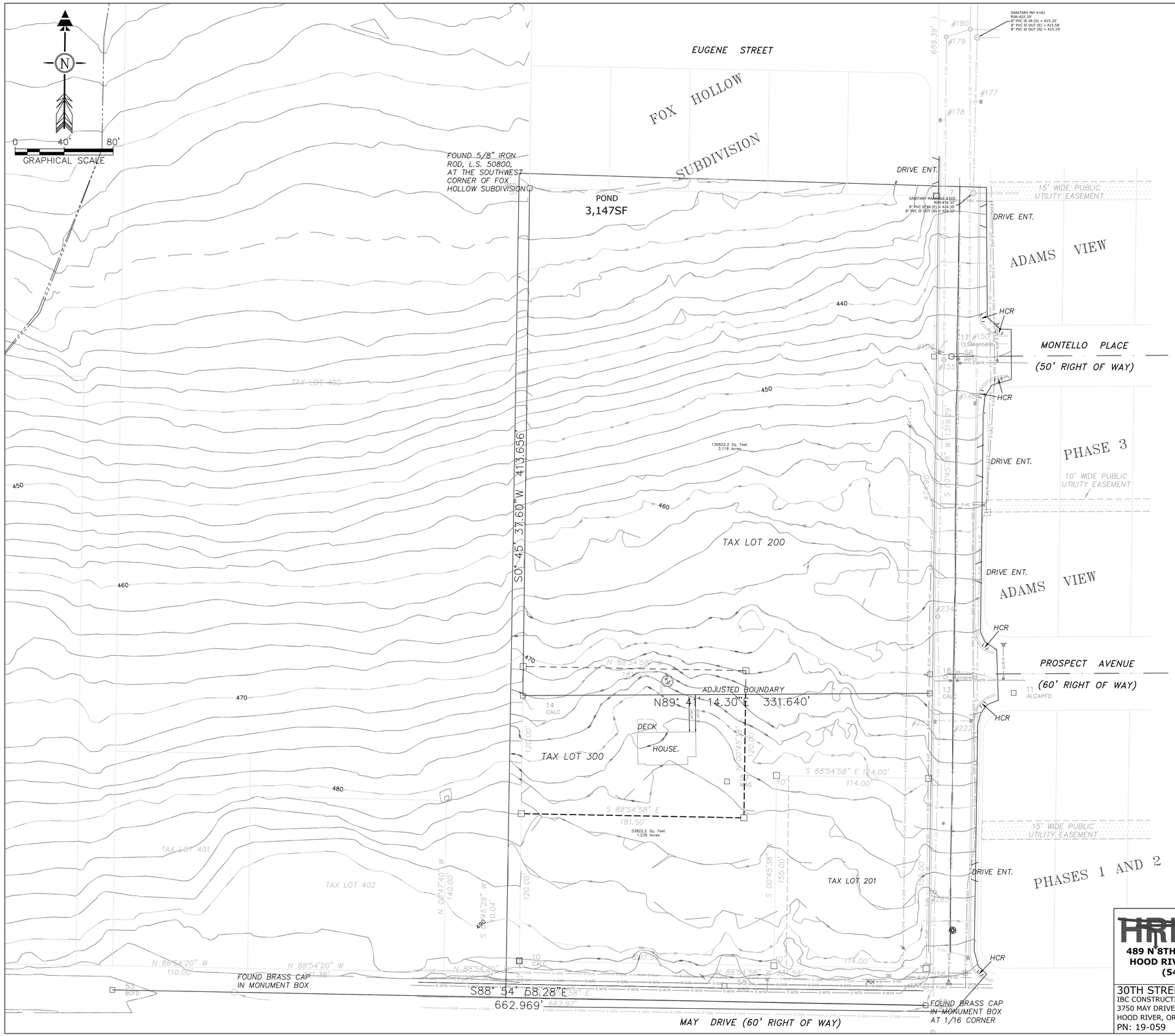

LEGEND:

- > - - - - > - - - -	EXISTING FLOWLINE
E-SD	EXISTING STORM SEWER
	EXISTING CATCH BASIN
SD	EXISTING STORM MANHOLE
	EXISTING STORM DRAINAGE CLEANOUT
E-SAN	EXISTING SANITARY SEWER
SS	EXISTING SANITARY MANHOLE
	EXISTING SANITARY CLEANOUT
E-WTR	EXISTING WATER LINE
	EXISTING FIRE HYDRANT
	EXISTING WATER VALVE
	EXISTING BLOW-OFF VALVE
W	EXISTING WATER METER
E-OHE	EXISTING OVERHEAD ELECTRIC POWER LINE
E-UE	EXISTING UNDERGROUND ELECTRIC POWER LINE
	EXISTING POWER POLE
E	EXISTING ELECTRIC METER
E-GAS	EXISTING NATURAL GAS LINE
G	EXISTING GAS METER
E-UC	EXISTING UNDERGROUND COMMUNICATION
C	EXISTING TELEPHONE RISER
100	EXISTING INDEX CONTOUR LINE
	EXISTING CONTOUR LINE
P.L.	PROPERTY LINE

HRK ENGINEERING & FIELD SERVICES
489 N 8TH STREET - SUITE 201
HOOD RIVER, OREGON 97031
(541) 386-6480

	NAME	DATE
DESIGNED	LL	07/30/20
DRAFTED	LL	07/30/20
APPROVED	JTJ	07/30/20

30TH STREET SUBDIVISION
IBC CONSTRUCTION, INC.
3750 MAY DRIVE
HOOD RIVER, OR 97031
PN: 19-059

CONCEPT 2
EXISTING CONDITIONS

DRAWING NO.
3
OF 8

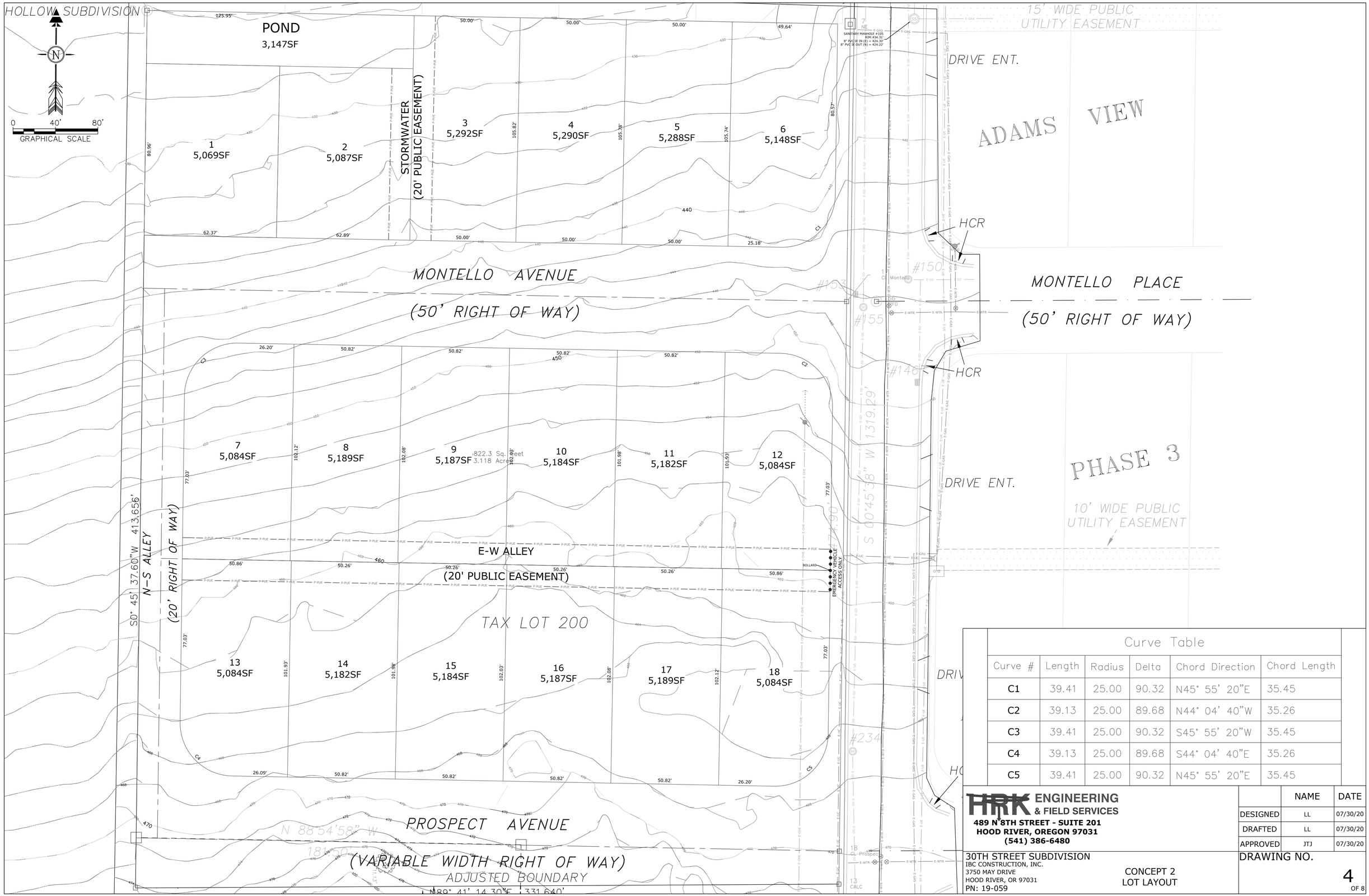

Curve Table

Curve #	Length	Radius	Delta	Chord Direction	Chord Length
C1	39.41	25.00	90.32	N45° 55' 20"E	35.45
C2	39.13	25.00	89.68	N44° 04' 40"W	35.26
C3	39.41	25.00	90.32	S45° 55' 20"W	35.45
C4	39.13	25.00	89.68	S44° 04' 40"E	35.26
C5	39.41	25.00	90.32	N45° 55' 20"E	35.45

HRK ENGINEERING & FIELD SERVICES
489 N 8TH STREET - SUITE 201
HOOD RIVER, OREGON 97031
(541) 386-6480

	NAME	DATE
DESIGNED	LL	07/30/20
DRAFTED	LL	07/30/20
APPROVED	JTJ	07/30/20

30TH STREET SUBDIVISION
IBC CONSTRUCTION, INC.
3750 MAY DRIVE
HOOD RIVER, OR 97031
PN: 19-059

CONCEPT 2
LOT LAYOUT

DRAWING NO.
4
OF 8

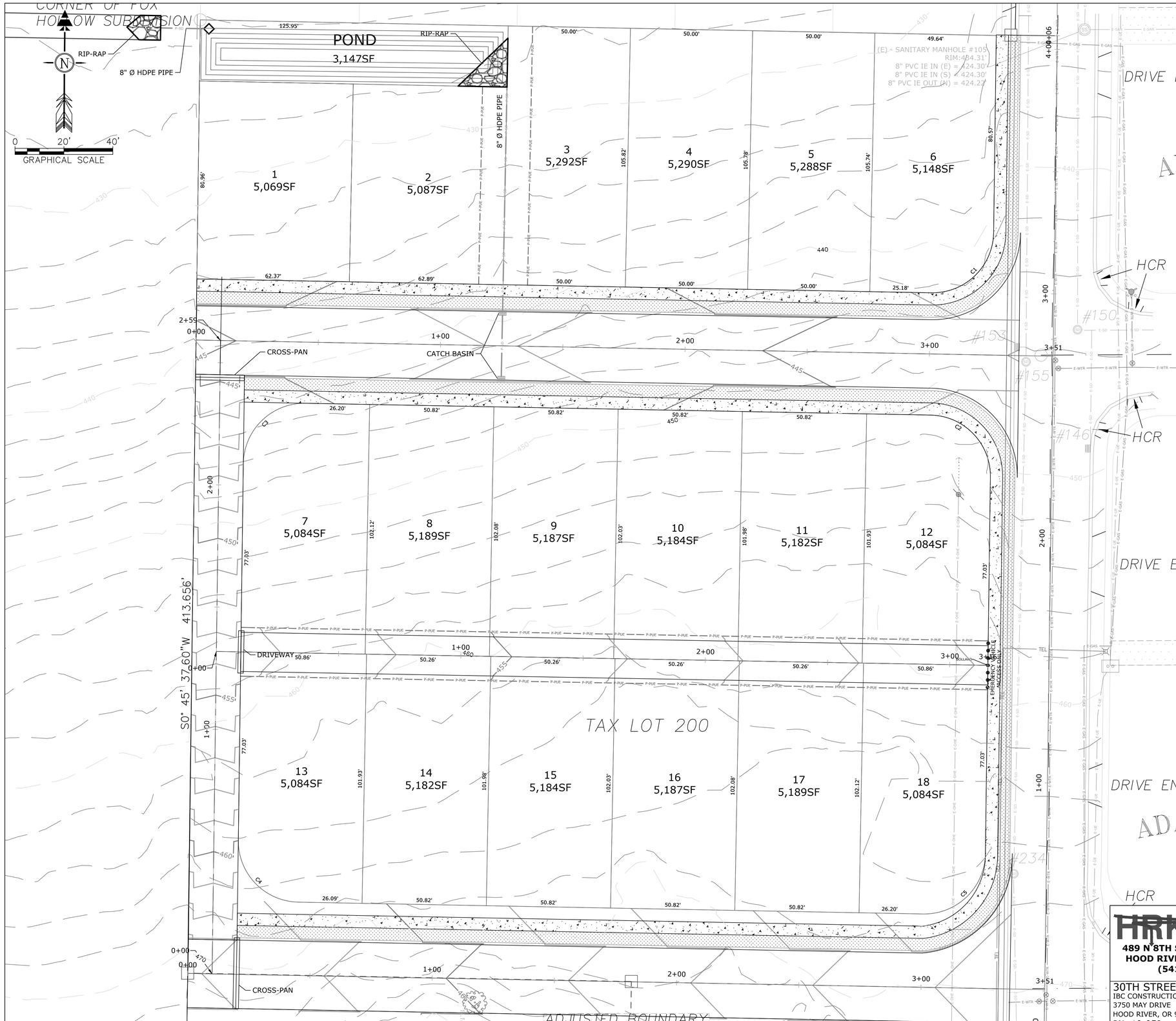

LEGEND:

- EXISTING STORM SEWER
- PROPOSED STORM SEWER
- EXISTING CATCH BASIN
- PROPOSED CATCH BASIN
- EXISTING STORM MANHOLE
- PROPOSED STORM MANHOLE
- EXISTING STORM DRAINAGE CLEANOUT
- PROPOSED STORM DRAINAGE CLEANOUT
- EXISTING SANITARY SEWER
- EXISTING SANITARY MANHOLE
- EXISTING SANITARY CLEANOUT
- EXISTING WATER LINE
- EXISTING FIRE HYDRANT
- EXISTING WATER VALVE
- EXISTING BLOW-OFF VALVE
- EXISTING WATER METER
- EXISTING OVERHEAD ELECTRIC POWER LINE
- PROPOSED OVERHEAD ELECTRIC POWER LINE
- EXISTING UNDERGROUND ELECTRIC POWER LINE
- PROPOSED UNDERGROUND ELECTRIC POWER LINE
- EXISTING POWER POLE
- PROPOSED POWER POLE
- PROPOSED LIGHT POLE
- EXISTING ELECTRIC METER
- PROPOSED ELECTRIC METER
- EXISTING NATURAL GAS LINE
- PROPOSED NATURAL GAS LINE
- EXISTING GAS METER
- PROPOSED GAS METER
- EXISTING UNDERGROUND COMMUNICATION
- PROPOSED UNDERGROUND COMMUNICATION
- EXISTING TELEPHONE RISER
- PROPOSED TELEPHONE RISER
- EXISTING INDEX CONTOUR LINE
- EXISTING CONTOUR LINE
- PROPOSED CONTOUR LINE
- EXISTING FENCE LINE
- PROPOSED FENCE LINE
- PROPOSED SILT FENCE
- PROPERTY LINE
- PROPOSED LOTS

HRK ENGINEERING & FIELD SERVICES
489 N 8TH STREET - SUITE 201
HOOD RIVER, OREGON 97031
(541) 386-6480

	NAME	DATE
DESIGNED	LL	08/03/20
DRAFTED	LL	08/03/20
APPROVED	JTJ	08/03/20

30TH STREET SUBDIVISION
IBC CONSTRUCTION, INC.
3750 MAY DRIVE
HOOD RIVER, OR 97031
PN: 19-059

CONCEPT 2
GRADING & STORM DRAINAGE PLAN

DRAWING NO.
5
OF 8

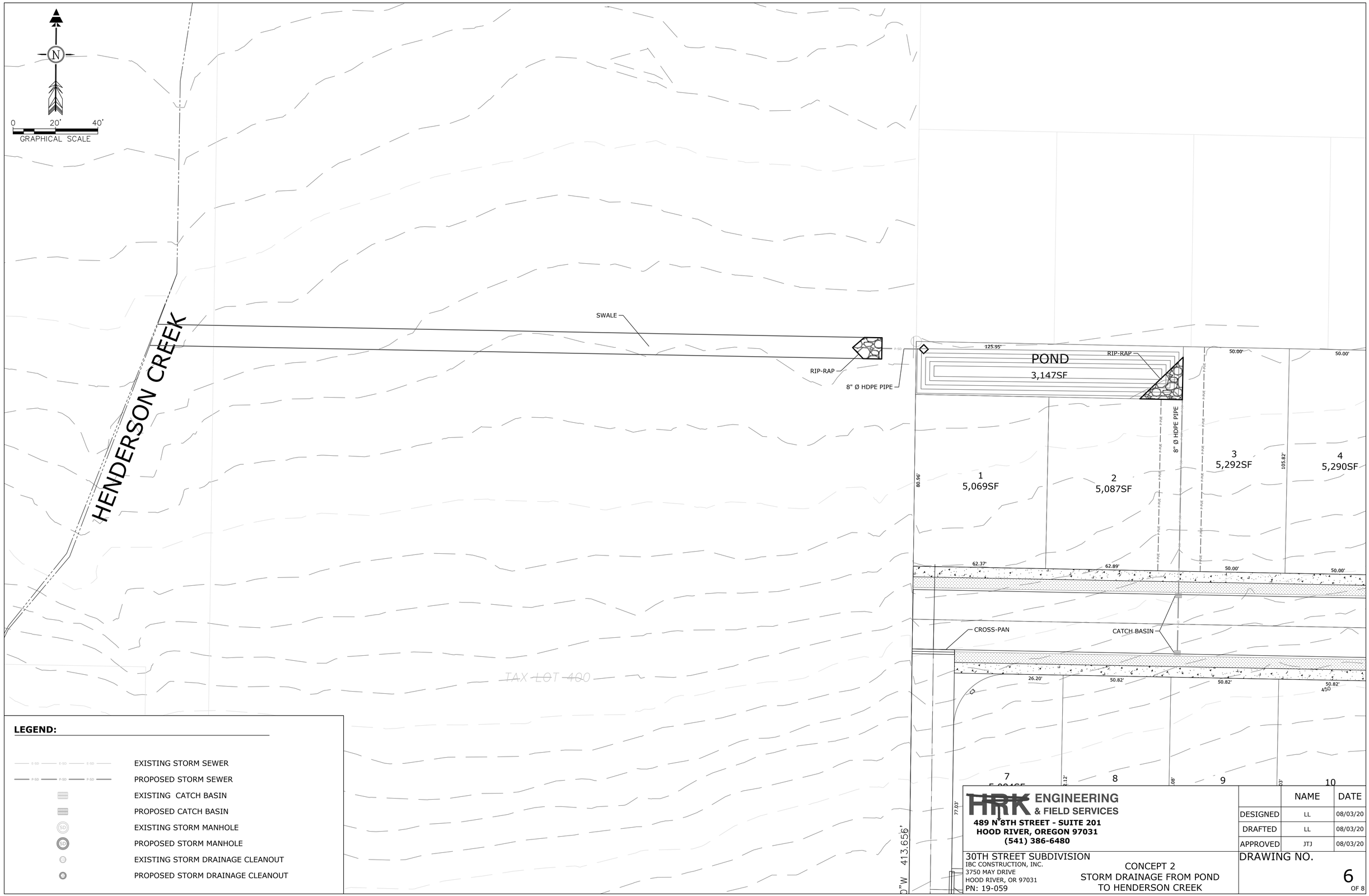

LEGEND:

E-SD	EXISTING STORM SEWER
P-SD	PROPOSED STORM SEWER
	EXISTING CATCH BASIN
	PROPOSED CATCH BASIN
SD	EXISTING STORM MANHOLE
SD	PROPOSED STORM MANHOLE
	EXISTING STORM DRAINAGE CLEANOUT
	PROPOSED STORM DRAINAGE CLEANOUT

HRK ENGINEERING & FIELD SERVICES
489 N 8TH STREET - SUITE 201
HOOD RIVER, OREGON 97031
(541) 386-6480

	NAME	DATE
DESIGNED	LL	08/03/20
DRAFTED	LL	08/03/20
APPROVED	JTJ	08/03/20

30TH STREET SUBDIVISION
IBC CONSTRUCTION, INC.
3750 MAY DRIVE
HOOD RIVER, OR 97031
PN: 19-059

CONCEPT 2
STORM DRAINAGE FROM POND
TO HENDERSON CREEK

DRAWING NO.
6
OF 8

HRK ENGINEERING & FIELD SERVICES
489 N 8TH STREET - SUITE 201
HOOD RIVER, OREGON 97031
(541) 386-6480

	NAME	DATE
DESIGNED	LL	08/03/20
DRAFTED	LL	08/03/20
APPROVED	JTJ	08/03/20

30TH STREET SUBDIVISION
IBC CONSTRUCTION, INC.
3750 MAY DRIVE
HOOD RIVER, OR 97031
PN: 19-059

CONCEPT 2
SANITARY AND WATER PLAN

DRAWING NO.
7
OF 8

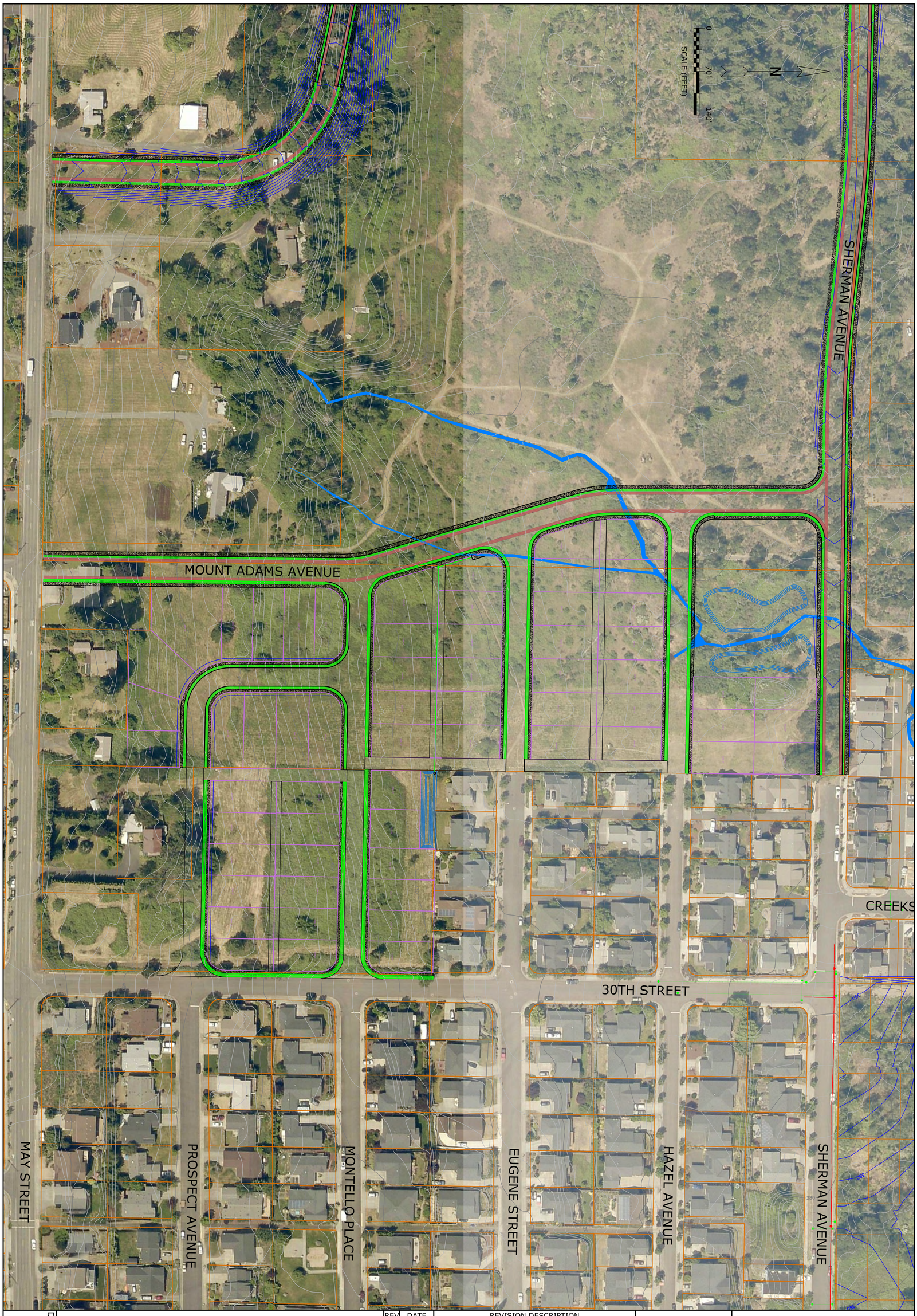

DRAWING NO. 8 OF 8

30TH STREET SUBDIVISION

IBC CONSTRUCTION, LLC.
3750 MAY STREET
HOOD RIVER, OR 97031

CONCEPT 2 - FUTURE OVERALL SITE PLAN

REV	DATE	REVISION DESCRIPTION

HRK ENGINEERING & FIELD SERVICES
489 N 8TH STREET - SUITE 201
HOOD RIVER, OREGON 97031
(541) 386-6480

PROJECT 19-059 07/31/2020

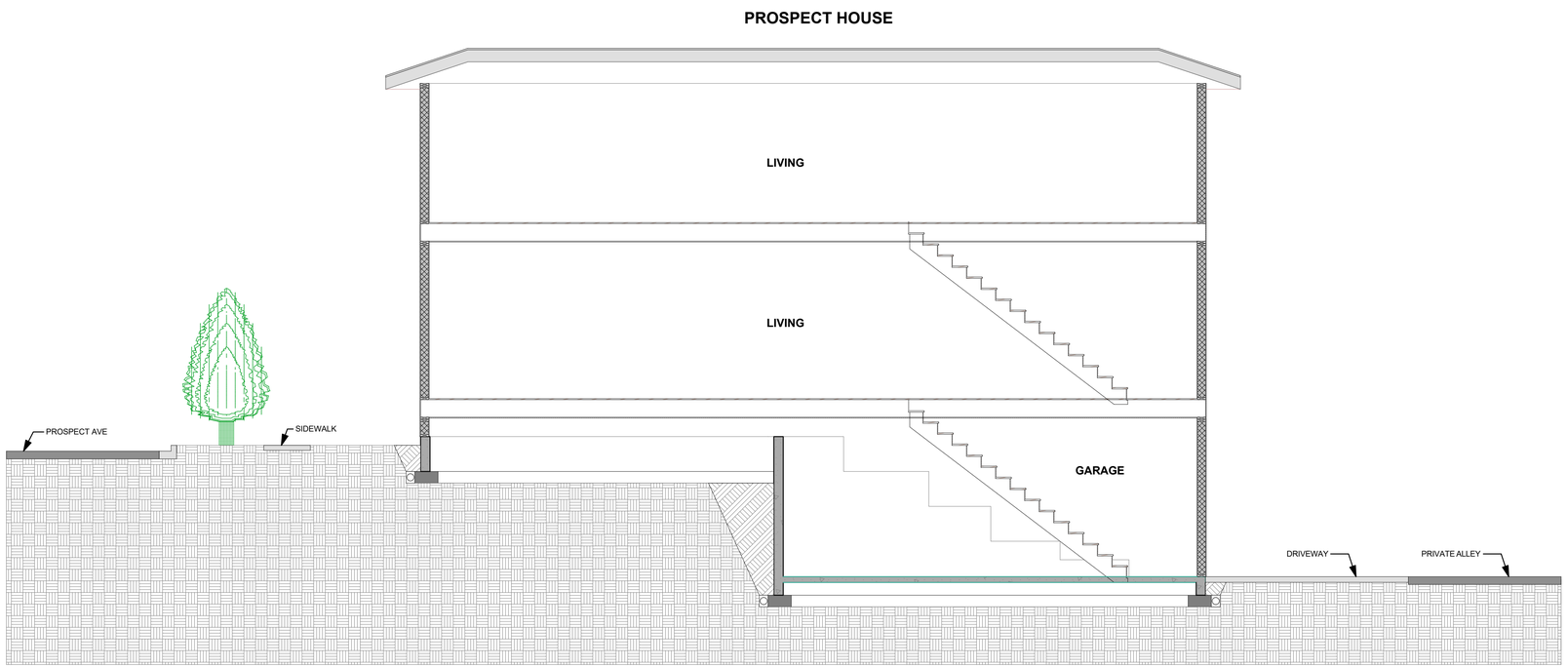

SECTION B 1/4" = 1'-0"

IBC #38 30th STREET SUBDIVISION

Drawn by: ####	Checked by: ####	A.1.16
Date Issued:	Revised Date:	
Scale: REFER TO PLAN	Dozen Solutions is not responsible for any changes after the date above.	

Project Description:
#Client Address1,
#Client Address2,
#Client City, #Client State.

THIS PLAN IS THE MOST CURRENT PLAN AS OF THIS DATE
7/23/2020
IF THIS DATE IS MORE THAN 1 WEEK OLD, PLEASE CONTACT THE OFFICE AT DOZEN SOLUTIONS THAT YOU HAVE THE MOST RECENT COPY

Disclaimer of Warranties

Plans furnished by **Dozen Solutions** are prepared by Draftsmen who are not Qualified as professional Architects or professional Engineers and who have had no training in Architectural or Engineering Design. **Dozen Solutions** makes no representations or warranties of any kind, nor assumes any responsibility for errors or omissions in the plans or specifications or other documents or any kind which may be found on the plans. Use of such plans shall be at the **Sole risk of the User**. **Dozen Solutions** makes no warranties, express or implied, as to the adequacy of these plans or any part thereof, that they are suitable for any general or particular purpose. Reliance by any **User** of these plans and **All Responsibility** for the usage and/or calculation of correct structural **Connections** that they require is the sole responsibility of the **User**. Any calculations based on the principles of mathematics, diagrams or the physical sciences must be the **Responsibility of the User** – or **Owner** – or the **User** of the plans.

Copyright

Any use, reproduction, copying, modification, or derivative work of the plan(s) furnished by **Dozen Solutions & /Client Contractor** is a violation of the United States Federal Copyright Act.

CONTRACTOR

IBC CONSTRUCTION LLC
RESIDENTIAL / COMMERCIAL
GB: CCIM 191294 WA:IN TEGRACHANZ CA:# 1020564

MONTELLO SOUTH HOUSE

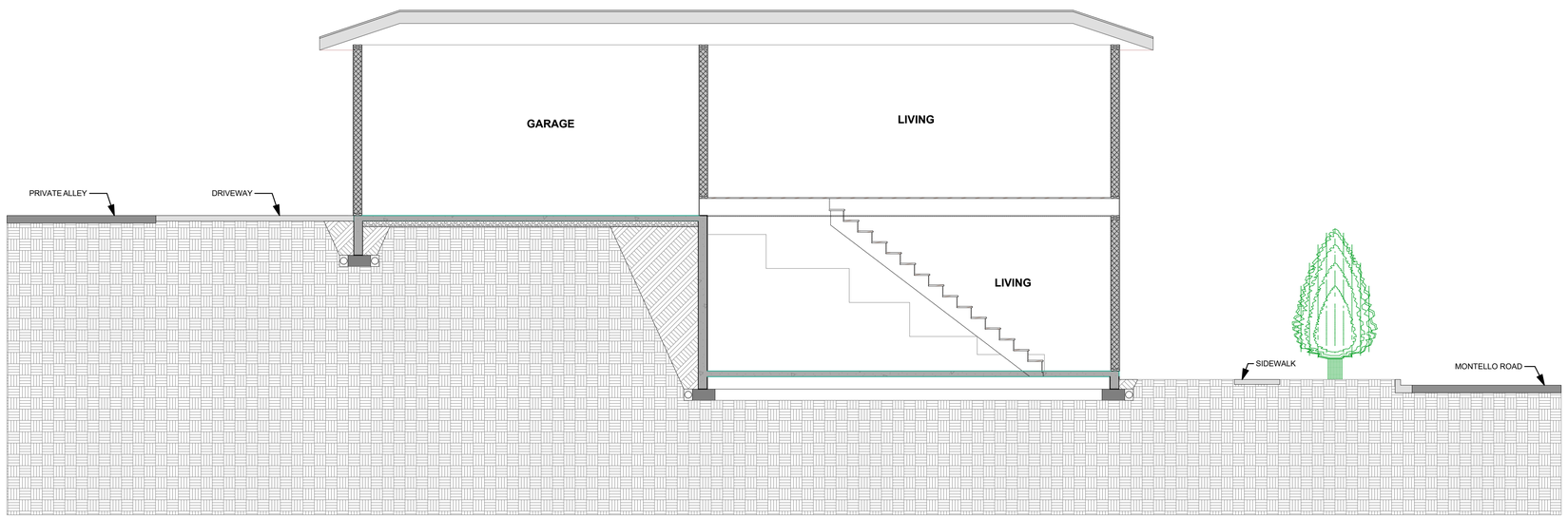

SECTION B

1/4" = 1'-0"

IBC #38 30th STREET SUBDIVISION

Drawn by: ####	Checked by: ####	A.1.17
Date Issued:	Revised Date:	
Scale: REFER TO PLAN	**Dozen Solutions** is not responsible for any changes after the date above.	

Project Description:

#Client Address1,
#Client Address2,
#Client City, #Client State.

THIS PLAN IS THE MOST CURRENT PLAN AS OF THIS DATE

7/23/2020

IF THIS DATE IS MORE THAN 1 WEEK OLD PLEASE CONTACT THE OFFICE AT DOZEN SOLUTIONS THAT YOU HAVE THE MOST RECENT COPY

Disclaimer of Warranties

Plans furnished by **Dozen Solutions** are prepared by Draftsmen who are not Qualified as professional Architects or professional Engineers and who have had no training in Architectural or Engineering Design. **Dozen Solutions** expressly disclaims any Warranty or Guarantee of any kind of any sort which may be found on the plans. Use of such plans shall be at the **Sole risk of the User**. **Dozen Solutions** makes no Warranty that such plans are suitable for any **Use** or purpose, that they are suitable for any general or particular purpose. Reliance by any **User** of these plans and **All Responsibility** for the usage and/or calculation of correct structural, mechanical, electrical or other engineering or architectural design or specification based on the principles of mathematics, science or the physical sciences must be the **Responsibility of the Builder** / **Owner** / **Contractor** / the **User** of the plans.

Copyright

Any use, reproduction, copying, modification, or derivative work of the plan(s) furnished by **Dozen Solutions & #Client Contractor** is a violation of the United States Federal Copyright Act.

CONTRACTOR

IBC CONSTRUCTION LLC
RESIDENTIAL / COMMERCIAL
OR CCB# 191284 WA INTERIOR/NAP# C-Y# 1510054

MONTELLO NORTH HOUSE

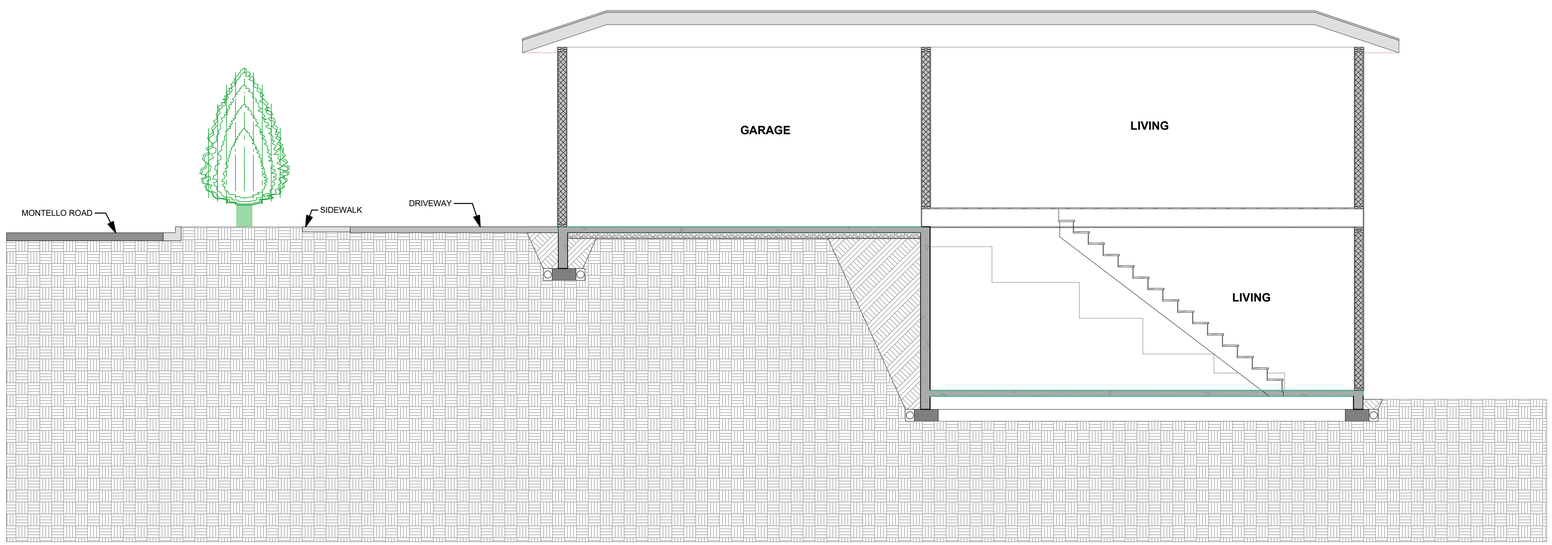

SECTION B

1/4" = 1'-0"

IBC #38 30th STREET SUBDIVISION

Drawn by: ####	Checked by: ####
Date Issued:	Revised Date:
Scale: REFER TO PLAN	Dozen Solutions is not responsible for any changes after the date above.

A.1.18

Project Description:

#Client Address1,
#Client Address2,
#Client City, #Client State.

THIS PLAN IS THE MOST CURRENT PLAN AS OF THIS DATE

7/23/2020

IF THIS DATE IS MORE THAN 1 WEEK OLD THIS SHEET MAY NOT BE THE AT DOZEN SOLUTIONS THAT YOU HAVE THE MOST RECENT COPY

Disclaimer of Warranties

Plans furnished by **Dozen Solutions** are prepared by Draftsmen who are not Qualified as professional Architects or professional Engineers and who have had no training in Architectural or Engineering Design. **Dozen Solutions** makes no representations or warranties of any kind, express or implied, as to the accuracy of any kind which may be found on the plans. Use of such plans shall be at the **Sole risk of the User**. **Dozen Solutions** makes no warranties, express or implied, as to the suitability of these plans for any purpose or particular purpose. Reliance by any **User** of these plans and **All Responsibility** for the usage and/or calculation of correct structural **Connections** lies they are suitable for a particular purpose. Reliance by any **User** of these materials and/or calculations and/or structural connections must be the **Responsibility of the User** or **Owner** or the **User** of the plans.

Copyright

Any use, reproduction, copying, modification, or derivative work of the plan(s) furnished by **Dozen Solutions & Client Contractor** is a violation of the United States Federal Copyright Act.

CONTRACTOR

IBC CONSTRUCTION LLC
RESIDENTIAL / COMMERCIAL
GB CCTM 191284 W.M.NYEGENCMNZ C.M 1310054

MEMORANDUM

Date: August 26, 2020

To: Dustin Nilsen, Director of Planning

From: Doug Powrie, Attorney on behalf of Applicant IBC

Project: IBC Subdivision Nature's Way Vistas

The purpose of this memorandum is to address the transportation elements of a proposed rezone and amendment to the comprehensive plan from Urban Low-Density Residential (R-1) to Urban Standard Residential (R-2) and to approve the proposed development site plan for a 3.12-acre property in Hood River, Oregon. The property is located at the corner of 30th St and Prospect Avenue on the South end and 100' North of 30th Street and Montello Avenue.

Tax Lot Description: 03N10E34A00200 See vicinity map below depicting the location of the property and pertinent transportation information.

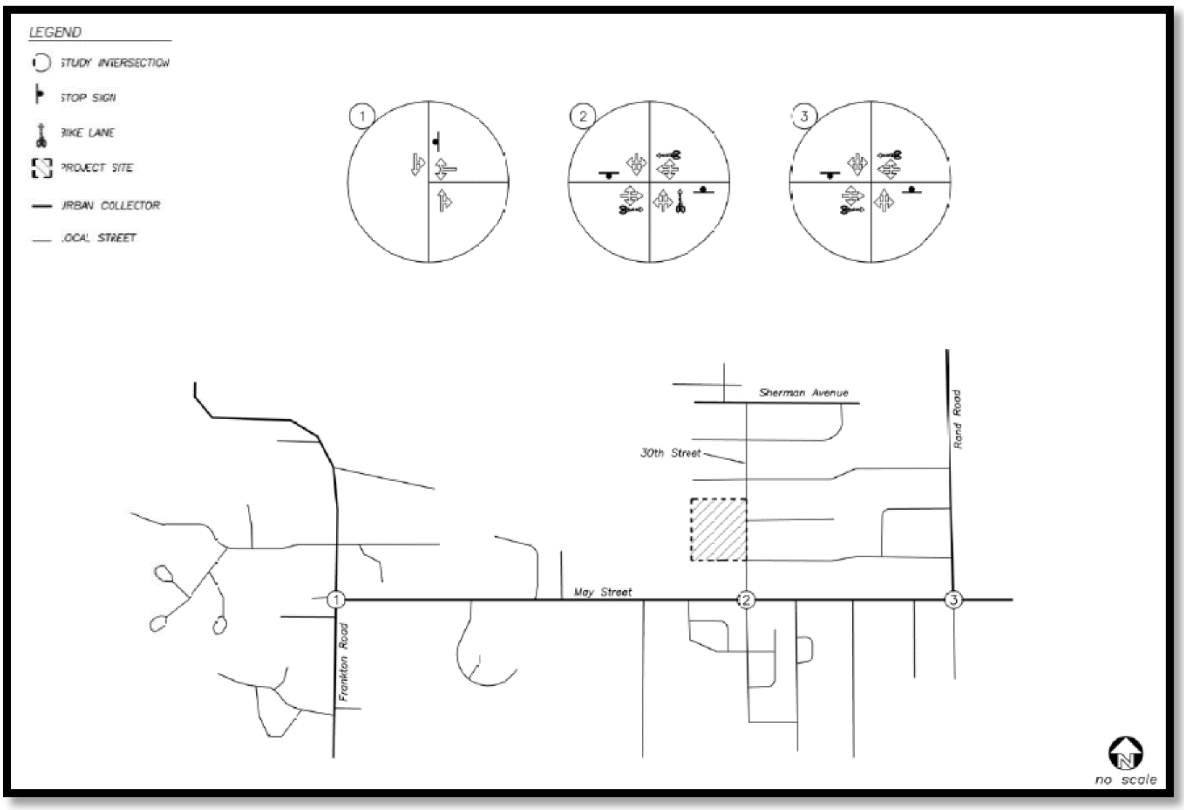

FIGURE 1: VICINITY MAP

A specific development plan has been identified for the site that calls for 18 duplex units; accordingly, this analysis is intended to support the rezone of the property and applicant's specific development plan. (See Pre-Plat attached as Exhibit 1) The immediate area around the proposed development is a mixture of both R-1 and R-2 zoning.

TPR APPROVAL CRITERIA

Oregon Administrative Rule (OAR) 660-12-0060, Plan and Land Use Regulation Amendments provides the relevant requirements for a rezone. The Transportation Planning Rule implements State Planning Goal 12 (Transportation) to encourage a safe, convenient, and economic transportation system. The rule also integrates other Statewide planning goals to coordinate land use planning to plan and develop transportation services and facilities in close coordination with rural and urban development.

Essentially, the proposed rezone and site development plan must show that the traffic remains in compliance with adopted area transportation plans, and it does not change the function or performance standards that have been adopted. If a "significant effect" is created by the rezone and site plan, the applicant must bring the City's Transportation System Plan back into compliance through plan amendments or some form of mitigation. As is discussed more completely in the Traffic Impact Analysis submitted with the Application for Zone Change and Site Plan Approval and below in the analysis of the applicable Transportation Planning Rule 17.08.050, the proposed rezone and site plan is not expected to significantly effect the transportation plan that has been adopted.

17.08.050 Transportation Planning Rule (legislative and quasi-judicial)

A. Zone changes and amendments to the comprehensive plan and land use regulations which significantly affect a transportation facility shall assure that allowed land uses are consistent with the function, capacity, and level of service of the facility identified in the Transportation System Plan. This shall be accomplished by one of the following:

1. Limiting the allowed land uses to be consistent with the planned function of the transportation facility;

2. Amending the Transportation System plan to ensure that existing, improved, or new transportation facilities are adequate to support the proposed land uses consistent with the requirement of the Transportation Planning Rule;

3. Altering land use designations, densities, or design requirements to reduce demand for automobile travel and meet travel needs through other modes;

4. Amending the Transportation System Plan to modify the planned function, capacity or performance standards of the transportation facility

Response: The proposed zone change is not expected to significantly affect a transportation facility. See response for 17.08.050.B.

B. A plan or land use regulation amendment significantly affects a transportation facility if it

1. Changes the functional classification of an existing or planned facility;

2. Changes the standards implementing a functional classification system;

3. As measured at the end of the planning period identified in the adopted transportation system plan or, when evaluating highway mobility on state facilities, as measured at the end of the 20 year planning horizon or planning horizon of 15 years from the proposed date of the amendment adoption, whichever is greater:

a. Allows types or levels of land use that would result in levels of travel or access that are inconsistent with the functional classification of a transportation facility;

b. Would reduce the level of service of the facility below the minimum acceptable level identified in the Transportation System Plan; or

c. Worsen the performance of an existing or planned transportation facility that is otherwise projected to perform below the minimum acceptable performance standard identified in the TSP or comprehensive plan.

Response: Sections (B.1), (B.2), and (B.3.a) are not triggered since the proposed zone change will not impact or alter the functional classification of any existing or planned facility. According to the Oregon Highway Plan, any amendment which increases the volume to capacity ratio further, or degrades the performance of a facility so that it does not meet an adopted mobility target at the planning horizon will significantly affect the facility unless it falls within the thresholds for a small increase of traffic. Policy 1F.5 defines a "small increase in traffic" in terms of certain thresholds based on average daily trips. In this case, the threshold for a small increase in traffic between the existing plan and the proposed amendment is no more than 400 daily trips. As shown in the worst-case trip generation comparison provided in the Traffic Impact Analysis, the net difference in worst-case trip generation is below 400. Therefore, sections (B.3.b) and (B.3.c) are not triggered.

In determining whether a significant effect occurs, the analysis considers the adopted performance standards governing the transportation system. Within the project area all roadway facilities are under the jurisdiction of the City of Hood river, whose performance standards are identified within the City of Hood River Transportation System Plan. A minimum level of service (LOS) D on transportation systems serving new developments is desired on streets and signalized and unsignalized intersections. Level of service is based on the most recent edition of the Highway Capacity Manual.

LAND DEVELOPMENT ASSUMPTIONS

The development scenario was used to assess the potential transportation impact of rezoning the 3.12-acre parcel from Urban Low-Density Residential (R-1) to Urban Standard Density Residential (R-2) under a reasonable worst-case development scenario. It is worth mentioning that the surrounding area of the proposed development of comprised of both R-1 and R-2 development. To identify a reasonable worst-case development scenario in terms of potential trip generation, review of the standard reference, Trip Generation, 10th Edition, published by the Institute of Transportation Engineers (ITE) was used to identify typical trip rates for the outright allowable uses.

Single Family Residential Development Potential (Existing Zoning)

R-1 zoning is one of three residential zone districts within the City of Hood River. The R1 zoning is intended to provide a variety of the most common residential housing opportunities to people in places with community sewer and water services available. The R1 zoning permits a minimum lot size of 7,000 square feet for the following permitted uses: detached single family dwellings and accessory structures, manufactures homes, mobile home park, and residential care facilities. Since single family dwellings have the highest trip rates of the permitted uses, this type of development was used to estimate the reasonable worst-case scenario. A conservative twenty percent reduction was taken to account for lot area needed for public easements, utilities, undevelopable area. Therefore, the maximum reasonable development which could occur under the R-1 zone is 16 lots of single family dwellings.

Review of the adjacent Fox Hollow subdivision shows that surrounding lots range from approximately 0.08 to 0.16 acres. The Adams View subdivision nearby lots are approximately roughly the same in size. Then the Hope Terrace PUD to the south across May Street has smaller lots that are 0.04 acres in size. Accordingly, it would be reasonable and consistent with current area development patterns to obtain densities near the maximum allowable values.

Urban Standard Density Residential (R-2) Development Potential

The R-2 zone permits a minimum lot size of 5,000 square feet for the following permitted uses: single-family detached housing and accessory structures, duplexes, townhomes, bed and breakfast facilities, family day care, residential care, and group residential. Since single family dwellings have the highest trip rates of the permitted uses, this type of development was used to estimate the reasonable worst-case scenario. Again, a conservative twenty percent reduction was taken to account for lot area needed for public easements, utilities, undevelopable area. Therefore, the maximum reasonable development which could occur under the R-2 zone is 22 lots of single family dwellings.

The following table provides a comparison of the reasonable worst-case development scenario under both existing and proposed zoning designations.

TABLE 1 TRIP GENERATION SUMMARY - PROPOSED ZONE CHANGE

		Morning Peak Hour			Evening Peak Hour			Weekday
Development Scenario	Size	In	Out	Total	In	Out	Total	Total
Existing – R-1	16 units	3	9	12	10	6	16	152
Proposed – R-2	22 units	4	12	16	14	8	22	208
Net Increase		**1**	**3**	**4**	**4**	**2**	**6**	**56**

We point to the conclusion stated in the applicable TPR discussion above the rezone and site development plan submitted will likely have no significant impact given the worst-case trip generation of less than 400 daily trips per day.

In the site plan submitted the applicant has designed duplexes to be built on 18 Lots in order to meet an urgent need for supply of housing in the lower end of the current market price range for comparable units. The levels of trip generation for the site plan submitted are more thoroughly discussed in the Traffic Impact Analysis.

Site Plan Submitted and the Current TSP

The Traffic Safety Plan ("TSP") currently in effect in the City of Hood River in the area of the development plan submitted by applicant is in the process of being revised. The current TSP

calls for the subject parcel to have a 70' right of way cuts the 3.12 acre parcel essentially in half rendering it economically unsuitable for development. The new proposed revision to the TSP calls for the relocation of the right of way in accordance with a design for a new arteriole that is referred to Alignment "D".

As a legal matter both the issue of the new proposed TSP and Alignment "D" are not a material consideration for the approval of this application for rezone and site plan for development. This is because the 70" right of way planned under the current TSP would not withstand constitutional scrutiny. Specifically, imposing a condition for a 70" right of way in order to obtain land use approval would fail both the rough proportionality test and the essential nexus tests imposed by *Hill v. City of Portland* 293 Or App 283 (2018) The facts of that case involved a city that required a right-of-way on private property as a condition for its owner to obtain land use approvals. *Hill v. City of Portland* evolved from a long line of cases, including *Nolan v. California Coastal Commission* 483 US 825,107 S Ct 3141, 97 L Ed 2d 677 (1987), and *Dolan v. City of Tigard*, 512 US 374, 114 S Ct 2309, 129 L Ed 2d304 (1994), that found such actions by government entities to be an unconstitutional exaction of private property under the Fifth and Fourteenth Amendments to the United States Constitution. Then, in 2013 *Koontz v St. Johns River Management District*, 570 U.S. 595, 133 S. Ct. 2586 (2013), the U.S. Supreme Court set the monetary exactions issue to rest and referred to them as "unconstitutional conditions" as opposed to "takings". The doctrine of unconstitutional conditions "provides that 'the government may not require a person to give up a constitutional right—here the right to receive just compensation when property is taken for a public use—in exchange for a discretionary benefit conferred by the government where the benefit has little or no relationship to the property".

In short, the City of Hood River cannot lawfully impose the current right of way as a condition of approval for the rezone and development plan proposed by the applicant because it would be a violation of the U.S Constitution.

In conclusion, the proposed rezone and development plan is compatible with other existing developments in the area, will supply much needed housing at the low end of the market and will not have a significant effect on the Transportation System Plan.

lancaster mobley

30th Street Subdivision

Transportation Impact Analysis

Hood River, Oregon

REGISTERED PROFESSIONAL ENGINEER
88808PE
OREGON
MAR. 12, 2019
DANIEL STUMPF
RENEWS: 6/30/2020

Date:
May 12, 2020

Prepared for:
Sean Wagner

Prepared by:
Jessica Hijar
Daniel Stumpf, PE

Table of Figures 3

Table of Tables 3

Executive Summary 4

Project Description 5
- Introduction 5
- Location Description 5
  - Vicinity Streets 5
  - Study Intersections 6

Site Trips 8
- Trip Generation 8
- Trip Distribution 8
- Interchange Area Management Plan Overlay Zone 11

Traffic Volumes 13
- Existing Conditions 13
- Background Conditions 13
- Build-Out Conditions 13

Safety Analysis 17
- Crash History Review 17
- Warrant Analysis 17
  - Left-Turn Lane Warrants 17
  - Preliminary Traffic Signal Warrants 18

Operational Analysis 19
- Performance Standards 19
- Delay & Capacity Analysis 19

Conclusions 20

Appendix 22

Table of Figures

Figure 1: Vicinity Map & Study Intersection Configurations 7
Figure 2: Site Trip Assignment & Distribution 10
Figure 3: Site Trip Distribution & Assignment - IAMP Intersections 12
Figure 4: Existing Traffic Volumes 14
Figure 5: Year 2022 Background Traffic Volumes 15
Figure 6: Year 2022 Buildout Traffic Volumes 16

Table of Tables

Table 1: Vicinity Roadway Descriptions 5
Table 2: Vicinity Intersection Descriptions 6
Table 3: Trip Generation Summary 8
Table 4: Total Site Trips through IAMP Intersections 11
Table 5: Capacity Analysis Summary 19

Executive Summary

1. A zone change and subsequent development of an 18-lot subdivision is proposed for construction on tax lot 200 in Hood River, Oregon. The project is dependent on an amendment to the existing City of Hood River Transportation System Plan, which will re-align the planned extension of Mt Adams Avenue further west.
2. The proposed development is estimated to generate a total of 13 trips during the morning peak hour, 18 trips during the evening peak hour, and 170 trips each weekday.
3. The proposed development does not generate enough trips to warrant further analysis at the six identified Interchange Access Management Plan intersections.
4. Based on a review of the most recent five years of available crash data, no significant trends or crash patterns were identified at any of the study intersections that were indicative of safety concerns.
5. Left-turn lane warrants were examined for the southbound left-turn at the intersection of May Street at Frankton Road, the eastbound left-tun at the intersection of May Street at 30th Street, and the eastbound left-turn at the intersection of May Street at Rand Road. No left-turn lanes were projected to be warranted at any of the applicable approaches under any of the analysis scenarios.
6. Traffic signal warrants are not projected to be met at any of the study intersections under all analysis scenarios.
7. Based on the results of the operational analysis, all study intersections are currently operating acceptably per City of Hood River standards and are projected to continue operating acceptably upon full buildout of the proposed development through year 2022. No operational mitigation is necessary or recommended for these intersections.
8. Based on the provided reasonable worst-case development scenarios under existing and proposed zones, the proposed zone change satisfies Oregon's Transportation Planning Rule.

Project Description

Introduction

An 18-lot subdivision is proposed for construction on tax lot 200 in Hood River, Oregon. The site has an area of approximately 3.18 acres. Based on correspondence with Hood River staff, the report conducts safety and capacity/level of service analyses at the following intersections:

1. May Street at Frankton Road
2. May Street at 30th Street
3. May Street at Rand Road

The purpose of this study is to determine whether the transportation system within the vicinity of the site is capable of safely and efficiently supporting the existing and proposed uses and to determine any mitigation that may be necessary to do so. Detailed information on the traffic counts, trip generation calculations, safety analyses, and level of service calculations is included in the appendix to this report.

Location Description

The project site is located west of 30th Street, north of May Street, and south of Eugene Street. Surrounding uses inlcude residential developments with varying allowable densities. The site will provide internal roadway connections that connect to the intersections Prospect Avenue and Montello Court along 30th Street.

Vicinity Streets

There are four roadways within the study area that are anticipated to carry site trips to and from the proposed development and that are discussed within this report. The characteristics of these roadways are summarized in Table 1.

Table 1: Vicinity Roadway Descriptions

Roadway	Jurisdiction	Classification	Speed (MPH)	Curbs/ Sidewalks	Bicycle Lanes	On-Street Parking
May Street	City of Hood River	Urban Collector	25	Partial	Partial	Partial
Frankton Road	City of Hood River	Urban Collector	30	Partial	No	No
30th Street	City of Hood River	Local Road, Future Minor Arterial	25	Partial	Partial	Partial
Rand Road	City of Hood River	Urban Collector	25	Partial	No	Partial

Study Intersections

Based on correspondence with the City of Hood River, three intersections were selected for analysis. The existing characteristics of these intersections are summarized in Table 2 on page 6.

Table 2: Vicinity Intersection Descriptions

Number	Intersection	Geometry	Traffic Control	Phasing/Stopped Approaches
1	May Street at Frankton Road	Three-Legged	Stop-Controlled	Westbound Stop-Controlled
2	May Street at 30th Street	Four-Legged	Stop-Controlled	North and Southbound Stop-Controlled
3	May Street at Rand Road	Four-Legged	Stop-Controlled	North and Southbound Stop-Controlled

A vicinity map showing the study intersection configurations is shown in Figure 1 on page 7.

Transportation System Plan Amendment

The current City of Hood River Transportation System Plan (TSP) includes an future roadway extension of Mt Adams Avenue, a minor arterial, that would go directly through the site, requiring a 70-foot right-of-way dedication that would prohibit the development of the proposed project. As discussed with the City of Hood River, there is a proposed amendment to the TSP which includes moving the Mt Adams Avenue extension to the west due to feasibility and/or constructability constraints of the currently adopted and planned location. Since the proposed subdivision can only be constructed pending the approval of the TSP amendment, the following analysis and findings within the report assume approval of the proposed amendment.

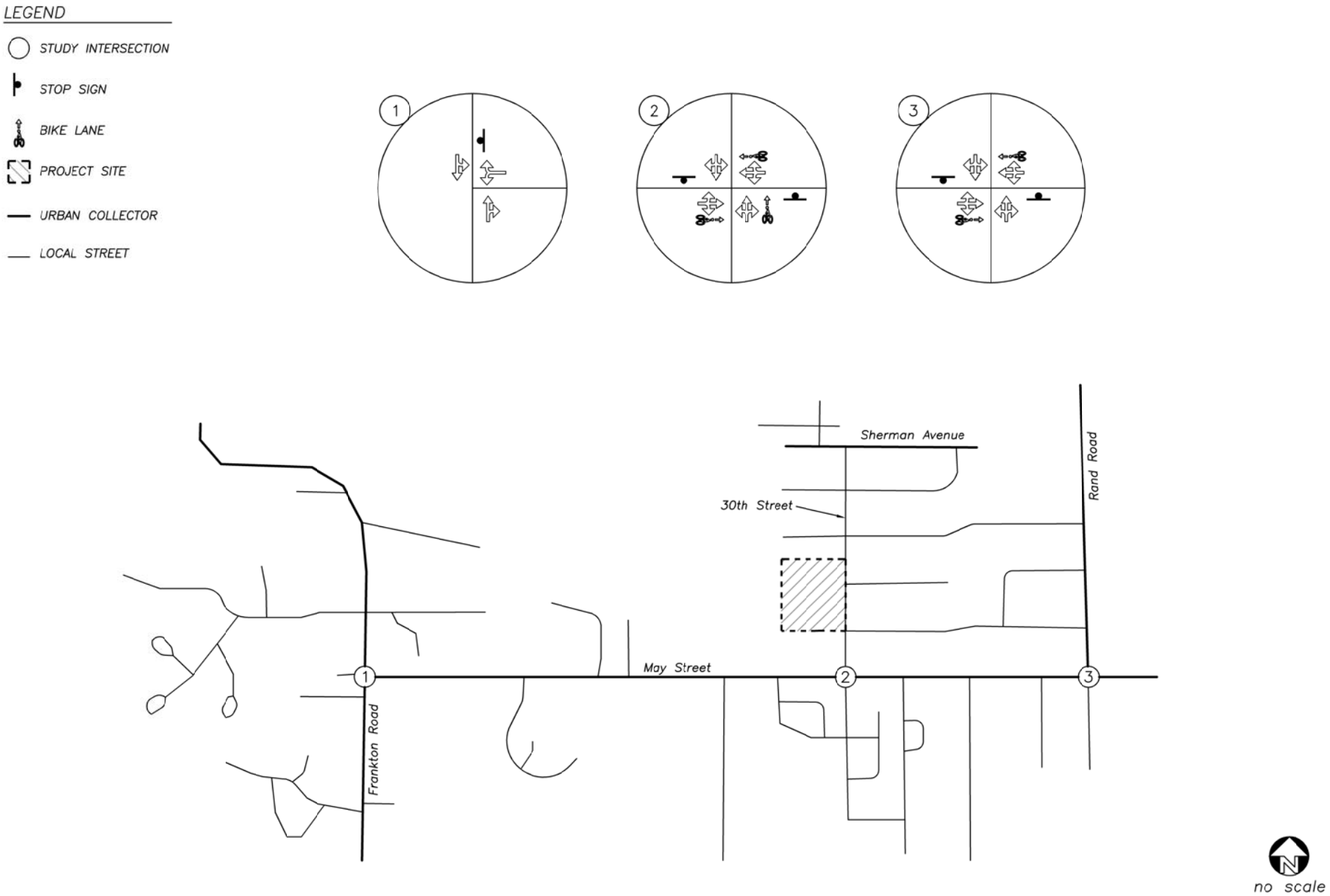

lancaster mobley

VICINITY MAP

Figure 1

30th St Subdivision

3/26/2020

Site Trips

Trip Generation – Proposed Zone Change

To determine the impacts of the proposed zone change, reasonable worst-case scenarios for the existing and proposed zones were compared utilizing data for the most traffic intensive uses permitted within each zone. The application includes a zone change from Urban Low-Density Residential Zone (R-1) to Urban Standard Density Residential Zone (R-2). The Hood River Municipal Code was referenced to determine each zone's minimum lot size. The minimum lot size under the existing R-1 zoning is 7,000 square feet and the minimum lot size under the proposed R-2 zoning is 5,000 square feet. A twenty percent reduction in lot area was taken to account for any undevelopable area due to wetlands, public easements or utilities, etc. Trip rates for land use code 210, *Single Family Detached Housing*, was used to estimate the worst-case trip scenarios. A summary of the proposed zone change is shown in Table 3.

Table 3: Trip Generation Summary - Proposed Zone Change

		Morning Peak Hour			Evening Peak Hour			Weekday
Development Scenario	Size	In	Out	Total	In	Out	Total	Total
Existing – R-1	16 units	3	9	12	10	6	16	152
Proposed – R-2	22 units	4	12	16	14	8	22	208
Net Increase		**1**	**3**	**4**	**4**	**2**	**6**	**56**

Trip Generation – Proposed Development

The proposed subdivision will include the construction of 18 single-family detached houses. To estimate the trip generation of the proposed development, trip rates from the *Trip Generation Manual*[1] were used. The trip rates used were those given for land use code 210, *Single-Family Detached Housing*, based on the number of dwelling units.

The proposed development is estimated to generate a total of 13 trips during the morning peak hour, 18 trips during the evening peak hour, and 170 trips each weekday. A summary of the trip generation for the proposed development is shown in Table 4.

Table 4: Trip Generation Summary – Proposed Development

		Morning Peak Hour			Evening Peak Hour			Weekday
ITE Code – Land Use	Size	In	Out	Total	In	Out	Total	Total
210 – Single-Family Detached Housing	18 units	3	10	13	11	7	18	170

In order to provide a conservative analysis, the trip generation attributed to the projected worst-case scenario for the proposed R-2 zoning is used for analysis.

[1] Institute of Transportation Engineers (ITE), Trip Generation Manual, 10th Edition, 2017

Trip Distribution

The directional distribution of site trips to and from the proposed development was estimated based on locations of likely trip destinations, locations of major transportation facilities in the site vicinity, and existing travel patterns at the study intersections.

The following trip distribution was estimated and used for analysis:

- 25 percent of site trips are expected to travel to and from the east along May Street
- 25 percent of site trips are expected to travel to and from the west along Interstate 84
- 20 percent of site trips are expected to travel to and from the east along Interstate 84
- 20 percent of site trips are expected to travel to and from the east along Cascade Avenue
- 5 percent of site trips are expected to travel to and from the west along Country Club Road
- 5 percent of site trips are expected to travel to and from the south along Frankton Road

The trip distribution and assignment are shown in Figure 2 on page 10.

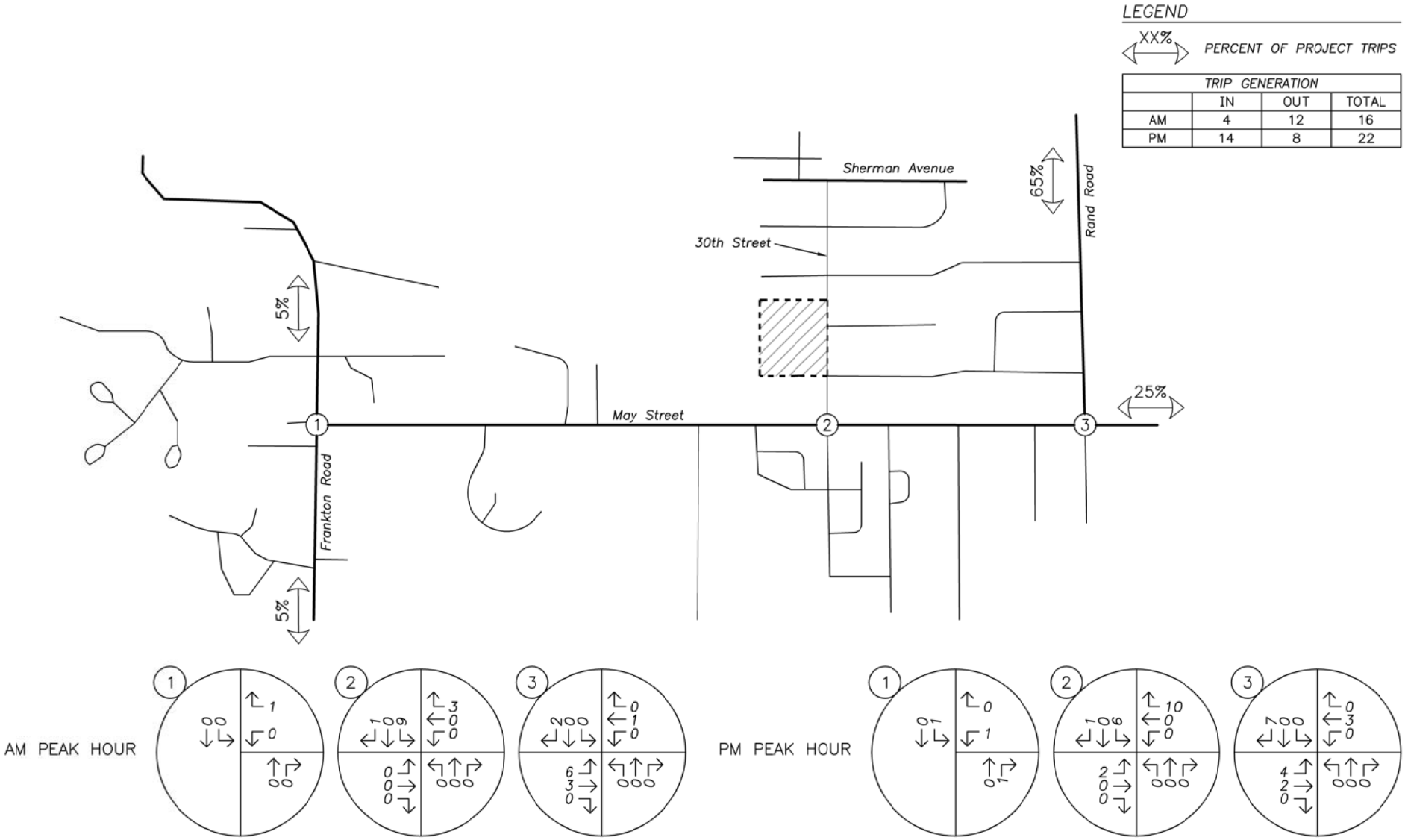

TRIP GENERATION			
	IN	OUT	TOTAL
AM	4	12	16
PM	14	8	22

lancaster mobley

SITE TRIP DISTRIBUTION & ASSIGNMENT - STUDY INTERSECTIONS

R-2 Zone Reasonable Worst-Case Scenario - Site Trips

AM & PM Peak Hours

Figure 2

30th St Subdivision

3/26/2020

Interchange Area Management Plan Overlay Zone

There is a total of six IAMP intersections that require the trip distribution and assignment generated from the development to be analyzed. Based on HRMC 17.20.060.I.1, intersections impacted by 25 or more PM peak hour site generated trips shall be analyzed for level of service and volume to capacity ratio during day of opening conditions. The six IAMP intersections are noted in the following table with a summary of the total number of site trips generated by the proposed development that impact each intersection:

Table 5: Total Site Trips through IAMP Intersections

Intersection	Site Trips AM	Site Trips PM
Westcliff Drive at Cascade Avenue	0	0
I-84 WB on/off ramps at Cascade Avenue	2	4
I-84 EB on/off ramps at Cascade Avenue	5	8
Mt Adams Avenue at Cascade Avenue	5	8
Cascade Avenue at Rand Road	8	11
Mt Adams Avenue at Country Club Road	0	0

The proposed development does not generate enough trips to warrant further analysis at the IAMP intersections. The trip assignment and distribution at the IAMP intersections is shown in Figure 3 on page 12.

LEGEND

XX% PERCENT OF PROJECT TRIPS

TRIP GENERATION			
	IN	OUT	TOTAL
AM	3	10	13
PM	11	6	17

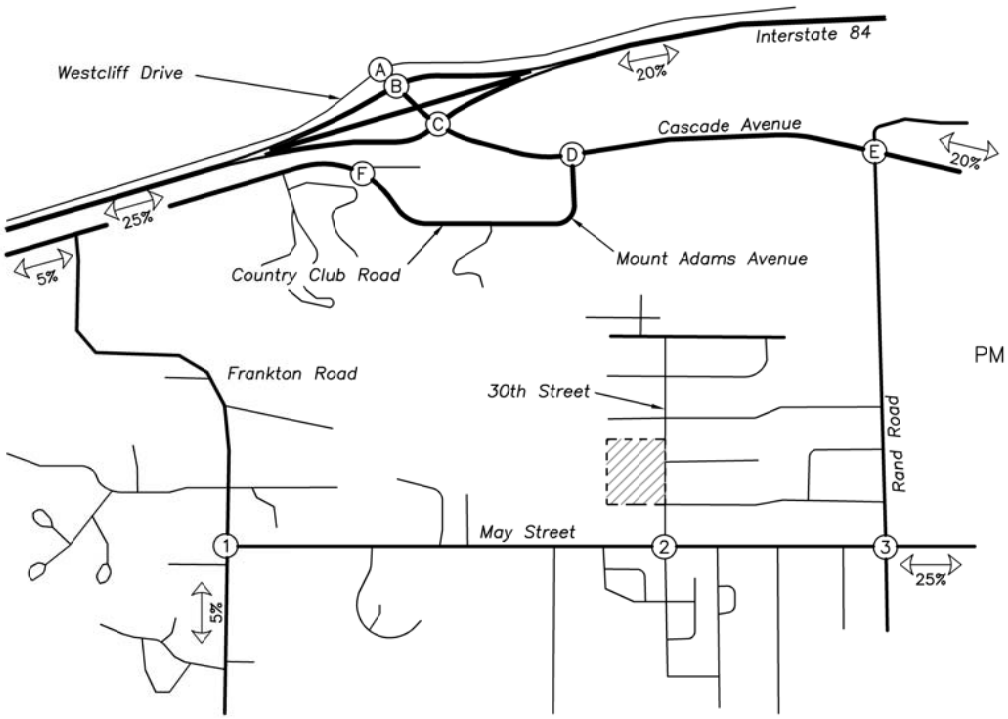

AM PEAK HOUR

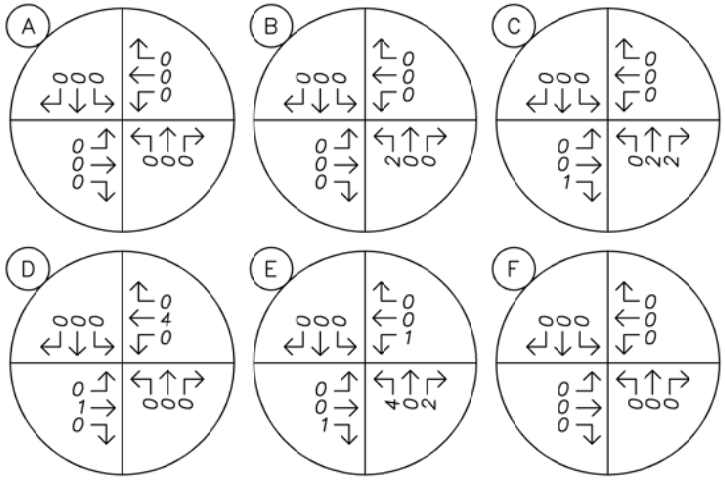

PM PEAK HOUR

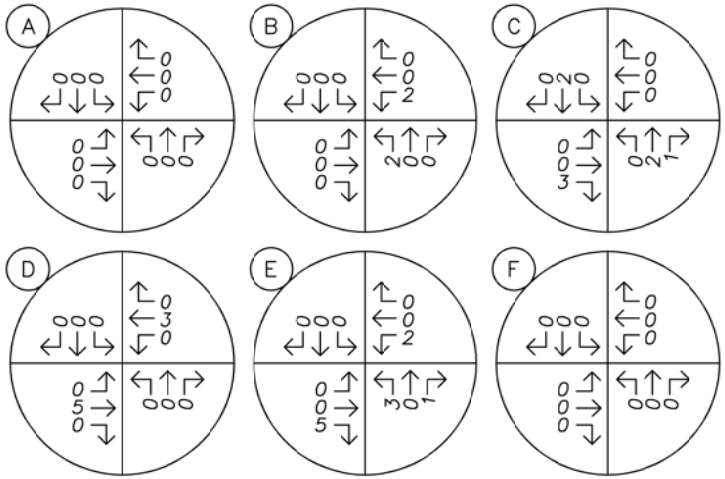

no scale

lancaster mobley

SITE TRIP DISTRIBUTION & ASSIGNMENT - IAMP INTERSECTIONS

Proposed Development Plan - Site Trips

AM & PM Peak Hours

Figure 3

30th St Subdivision

3/26/2020

Traffic Volumes

Existing Conditions

Traffic counts were collected on Tuesday, February 25, 2020 between 7:00 AM and 9:00 AM and between 4:00 PM and 6:00 PM in order to gather data for each intersection's morning and evening peak hours, respectively. Each intersection's peak hours were used for analysis. The existing traffic volumes are shown in Figure 4 on page 14.

Background Conditions

To estimate future traffic volumes, a compounded growth rate of two percent per year was used to estimate year 2022 traffic volumes, before accounting for trips to be generated by the proposed development. Additionally, trips associated with several nearby developments which are anticipated to be fully built out by the year 2022 were added as in-process trips. In-process developments in the vicinity of the subject site include:

- Tanner Ranch Subdivision
- Olive View Subdivision
- Willow Ponds Phase 4 & 5
- Adams Creek Cohousing
- Leeward Apartments

For in-process developments in which trip distribution information was not provided, it was assumed the trips would follow a similar trip distribution to that of the proposed development. The year 2022 background traffic volumes are shown in Figure 5 on page 15.

Build-Out Conditions

The trips estimated to be generated by the proposed development, as described earlier within the *Site Trips* section, were added to the year 2022 background traffic volumes in order to estimate traffic volumes under the year 2022 build-out conditions. The year 2022 build-out traffic volumes are shown in Figure 6 on page 16.

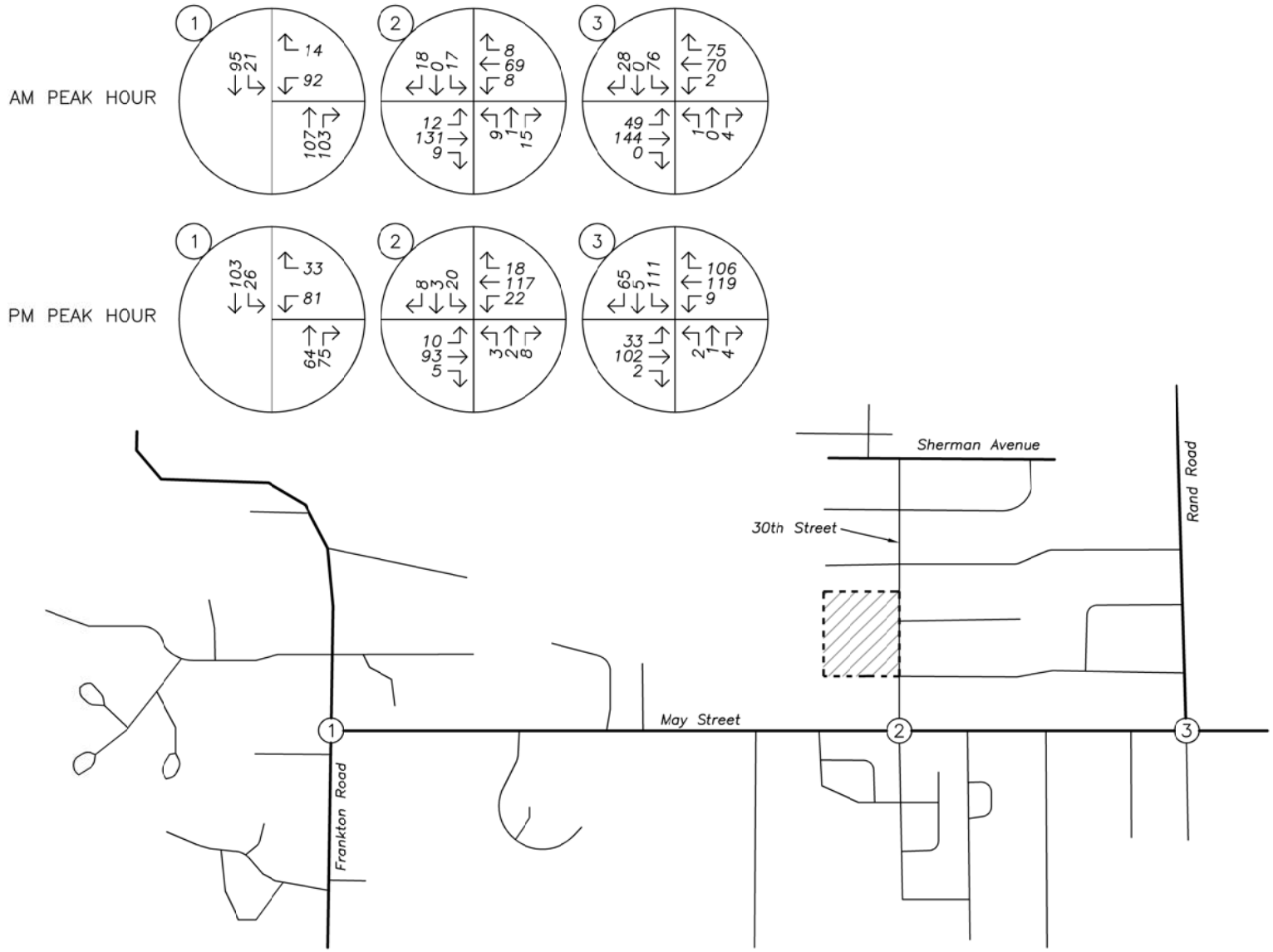

lancaster mobley

TRAFFIC VOLUMES
Year 2020 Existing Conditions
AM & PM Peak Hours

Figure 4
30th St Subdivision
3/26/2020

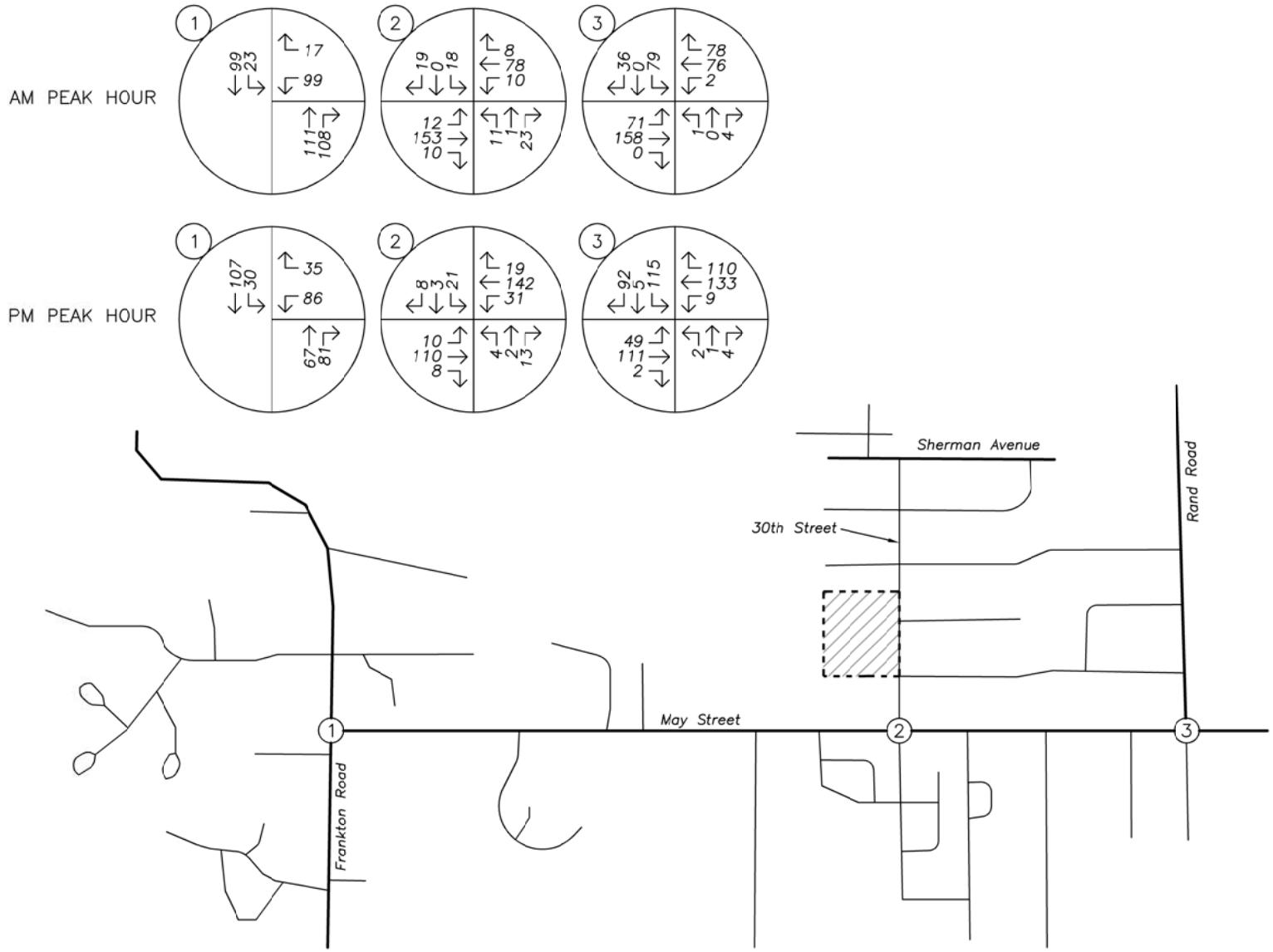

lancaster mobley

TRAFFIC VOLUMES
Year 2022 Background Conditions
AM & PM Peak Hours

Figure 5
30th St Subdivision
3/26/2020

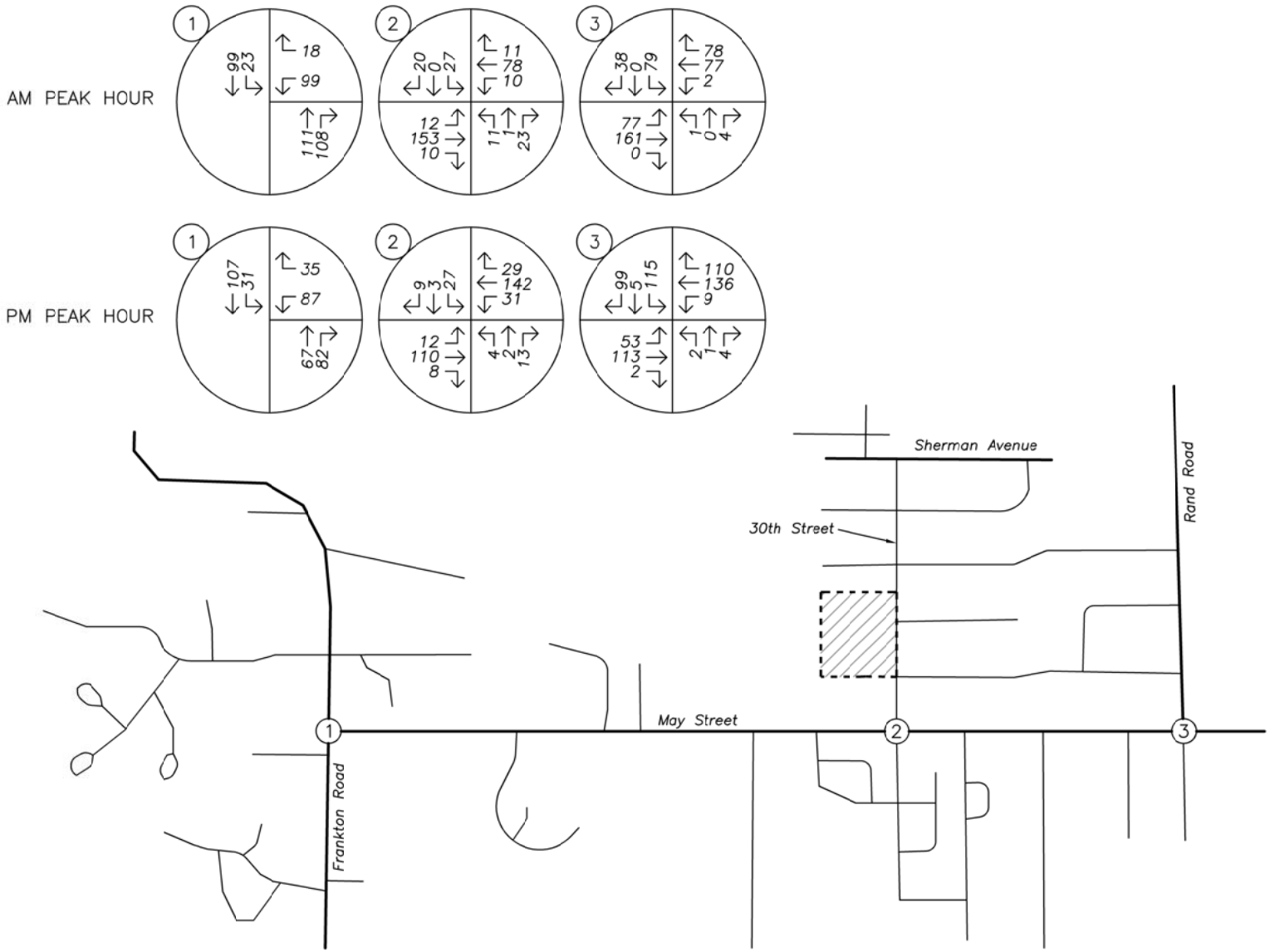

lancaster mobley

TRAFFIC VOLUMES
Year 2022 Buildout Conditions
AM & PM Peak Hours

Figure 6
30th St Subdivision
3/26/2020

Safety Analysis

Crash History Review

Using data obtained from the ODOT's Crash Analysis and Reporting Unit, a review of the most recent available five years of crash history (January 2013 to December 2017) at the study intersections was performed. The crash data was evaluated based on the number of crashes, the type of collisions, the severity of the collisions, and the resulting crash rate for the intersection. Crash rates provide the ability to compare safety risks at different intersections by accounting for both the number of crashes that have occurred during the study period and the number of vehicles that typically travel through the intersection. Crash rates were calculated using the common assumption that traffic counted during the evening peak hour represents approximately 10 percent of the annual average daily traffic (AADT) at the intersection. Crash rates in excess of 1.0 crashes per million entering vehicles (CMEV) may be indicative of design deficiencies and therefore require a need for further investigation and possible mitigation.

With regard to crash severity, ODOT classifies crashes in the following categories:

- Property Damage Only (PDO);
- Possible Injury – Complaint of Pain (Injury C);
- Non-Incapacitating Injury (Injury B);
- Incapacitating Injury – Bleeding, Broken Bones (Injury A); and
- Fatality or Fatal Injury.

Detailed ODOT crash reports are included in the technical appendix to this report.

One crash was reported at the intersection of May Street at Rand Street. The crash was classified as a turning movement collision and resulted in both drivers of each vehicle sustaining possible injuries. The crash rate for this intersection was calculated to be 0.59 CMEV.

The intersections of May Street at 30th Street and May Street at Frankton Road had no reported crashes during the analysis period.

Based on a review of the most recent five years of available crash data, no significant trends or crash patterns were identified at any of the study intersections that were indicative of safety concerns.

Warrant Analysis

Left-turn lane and preliminary traffic signal warrants were examined for the study intersections where such treatments would be applicable.

Left-Turn Lane Warrants

A left-turn refuge lane is primarily a safety consideration for the major-street, removing left-turning vehicles from the through traffic stream. The left-turn lane warrants used were developed from the *National Cooperative Highway Research Project's* (NCHRP) *Report 457*. Turn lane warrants were evaluated based on the number of

advancing and opposing vehicles as well as the number of turning vehicles, the travel speed, and the number of through lanes.

Left-turn lanes were examined for all major-street left-turn approaches in which the proposed development is expected to contribute site trips. This includes the southbound left-turn at the intersection of May Street at Frankton Road, the eastbound left-tun at the intersection of May Street at 30th Street, and the eastbound left-turn at the intersection of May Street at Rand Road. No left-turn lanes were projected to be warranted at any of the applicable approaches under any of the analysis scenarios.

Preliminary Traffic Signal Warrants

Preliminary traffic signal warrants were examined for the unsignalized study intersections to determine whether the installation of a new traffic signal will be warranted at the intersections by the 2022 site buildout year. Due to the City of Hood River's estimated population, 70 percent of standard warrants were used.

Traffic signal warrants are not projected to be met at any of the study intersections under all analysis scenarios.

Operational Analysis

To determine the level of service at the study intersections, a capacity analysis was conducted. The analysis was conducted using the unsignalized intersection analysis methodologies in the Highway Capacity Manual (HCM). Level of service (LOS) can range from LOS A, which indicates little or no delay, to LOS F, which indicates a significant amount of congestion and delay. The volume to capacity (v/c) ratio is a measure that compares the traffic volume (demand) against the available capacity of an intersection, with v/c ratios above 1.0 indicating that an intersection is operating above capacity.

Performance Standards

Based on the City of Hood River Transportation System Plan, a minimum LOS D on transportation systems serving new developments is desired on streets and at signalized/unsignalized intersections. Level of service shall be based on the most recent edition of the Highway Capacity Manual.

Delay & Capacity Analysis

The results of the capacity and delay analysis are shown in Table 6.

Table 6: Capacity Analysis Summary

	Morning Peak Hour			Evening Peak Hour		
	LOS	Delay (s)	v / c	LOS	Delay (s)	v/c
May Street at Frankton Street						
2020 Existing	B	12	0.18	B	11	0.18
2022 Background	B	12	0.20	B	11	0.20
2022 Buildout	B	12	0.20	B	11	0.20
May Street at 30th Street						
2020 Existing	B	10	0.06	B	11	0.06
2022 Background	B	10	0.06	B	12	0.06
2022 Buildout	B	11	0.08	B	12	0.08
May Street at Rand Street						
2020 Existing	B	13	0.22	B	15	0.37
2022 Background	B	15	0.27	C	17	0.46
2022 Buildout	B	15	0.28	C	18	0.48

Based on the results of the operational analysis, all study intersections are currently operating acceptably per City of Hood River standards and are projected to continue operating acceptably upon full buildout of the proposed development through year 2022. No operational mitigation is necessary or recommended for these intersections.

Transportation Planning Rule

660-012-0060 Plan and Land Use Regulation Amendments

1. If an amendment to a functional plan, an acknowledged comprehensive plan, or a land use regulation (including a zoning map) would significantly affect an existing or planned transportation facility, then the local government must put in place measures as provided in section (2) of this rule, unless the amendment is allowed under section (3), (9) or (10) of this rule. A plan or land use regulation amendment significantly affects a transportation facility if it would:

    (a) Change the functional classification of an existing or planned transportation facility (exclusive of correction of map errors in an adopted plan);

Response: This section is not triggered since the proposed zone change will not impact or alter the functional classification of any existing or planned facility.

(b) Change standards implementing a functional classification system; or

Response: This section is not triggered since the proposed zone change will not impact or alter the functional classification of any existing or planned facility.

(c) Result in any of the effects listed in paragraphs (A) through (C) of this subsection based on projected conditions measured at the end of the planning period identified in the adopted TSP. As part of evaluating projected conditions, the amount of traffic projected to be generated within the area of the amendment may be reduced if the amendment includes an enforceable, ongoing requirement that would demonstrably limit traffic generation, including, but not limited to, transportation demand management. This reduction may diminish or completely eliminate the significant effect of the amendment.

(A) Types or levels of travel or access that are inconsistent with the functional classification of an existing or planned transportation facility;

(B) Degrade the performance of an existing or planned transportation facility such that it would not meet the performance standards identified in the TSP or comprehensive plan; or

(C) Degrade the performance of an existing or planned transportation facility that is otherwise projected to not meet the performance standards identified in the TSP or comprehensive plan.

Response: According to the Oregon Highway Plan, a small increase of traffic will not cause "further degradation" of a facility. Policy 1F.5 defines a "small increase in traffic" in terms of certain thresholds based on average daily trips. In this case, the threshold for a small increase in traffic between the existing plan and the proposed amendment is no more than 400 daily trips. Since the net difference in worst-case trip generation is below 400, this section is not triggered.

Conclusions

Based on a review of the most recent five years of available crash data, no significant trends or crash patterns were identified at any of the study intersections that were indicative of safety concerns.

Left-turn lane warrants were examined for the southbound left-turn at the intersection of May Street at Frankton Road, the eastbound left-tun at the intersection of May Street at 30th Street, and the eastbound left-turn at the intersection of May Street at Rand Road. No left-turn lanes were projected to be warranted at any of the applicable approaches under any of the analysis scenarios.

Traffic signal warrants are not projected to be met at any of the study intersections under all analysis scenarios.

Based on the results of the operational analysis, all study intersections are currently operating acceptably per City of Hood River standards and are projected to continue operating acceptably upon full buildout of the proposed development through year 2022. No operational mitigation is necessary or recommended for these intersections.

Based on the provided reasonable worst-case development scenarios under existing and proposed zones, the proposed zone change satisfies Oregon's Transportation Planning Rule.

Appendix

TRIP GENERATION CALCULATIONS

Land Use: Single-Family Detached Housing
Land Use Code: 210
Setting/Location General Urban/Suburban
Variable: Dwelling Units
Variable Value: 16

AM PEAK HOUR

Trip Rate: 0.74

	Enter	Exit	Total
Directional Distribution	25%	75%	
Trip Ends	**3**	**9**	**12**

PM PEAK HOUR

Trip Rate: 0.99

	Enter	Exit	Total
Directional Distribution	63%	37%	
Trip Ends	**10**	**6**	**16**

WEEKDAY

Trip Rate: 9.44

	Enter	Exit	Total
Directional Distribution	50%	50%	
Trip Ends	**76**	**76**	**152**

SATURDAY

Trip Rate: 9.54

	Enter	Exit	Total
Directional Distribution	50%	50%	
Trip Ends	**76**	**76**	**152**

Source: Trip Generation Manual, Tenth Edition

TRIP GENERATION CALCULATIONS

Land Use: Single-Family Detached Housing
Land Use Code: 210
Setting/Location General Urban/Suburban
Variable: Dwelling Units
Variable Value: 22

AM PEAK HOUR

Trip Rate: 0.74

	Enter	Exit	Total
Directional Distribution	25%	75%	
Trip Ends	**4**	**12**	**16**

PM PEAK HOUR

Trip Rate: 0.99

	Enter	Exit	Total
Directional Distribution	63%	37%	
Trip Ends	**14**	**8**	**22**

WEEKDAY

Trip Rate: 9.44

	Enter	Exit	Total
Directional Distribution	50%	50%	
Trip Ends	**104**	**104**	**208**

SATURDAY

Trip Rate: 9.54

	Enter	Exit	Total
Directional Distribution	50%	50%	
Trip Ends	**105**	**105**	**210**

Source: Trip Generation Manual, Tenth Edition

TRIP GENERATION CALCULATIONS
Proposed Conditions

Land Use: Single-Family Detached Housing
Land Use Code: 210
Setting/Location General Urban/Suburban
Variable: Dwelling Units
Variable Value: 18

AM PEAK HOUR

Trip Rate: 0.74

	Enter	Exit	Total
Directional Distribution	25%	75%	
Trip Ends	**3**	**10**	**13**

PM PEAK HOUR

Trip Rate: 0.99

	Enter	Exit	Total
Directional Distribution	63%	37%	
Trip Ends	**11**	**7**	**18**

WEEKDAY

Trip Rate: 9.44

	Enter	Exit	Total
Directional Distribution	50%	50%	
Trip Ends	**85**	**85**	**170**

SATURDAY

Trip Rate: 9.54

	Enter	Exit	Total
Directional Distribution	50%	50%	
Trip Ends	**86**	**86**	**172**

Source: Trip Generation Manual, Tenth Edition

All Traffic Data Services Inc.

(303) 216-2439
www.alltrafficdata.net

Location: 30TH ST & MAY ST AM
Date: Tuesday, February 25, 2020
Peak Hour: 07:25 AM - 08:25 AM
Peak 15-Minutes: 08:05 AM - 08:20 AM

Peak Hour

Motorized Vehicles

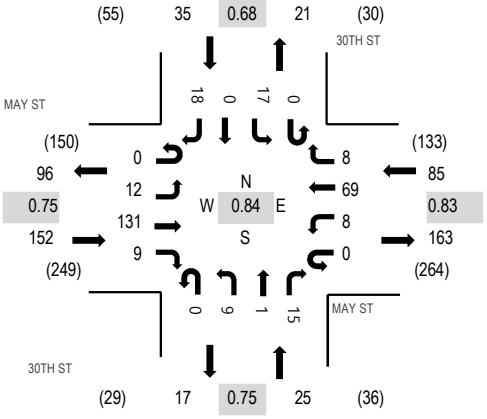

Heavy Vehicles

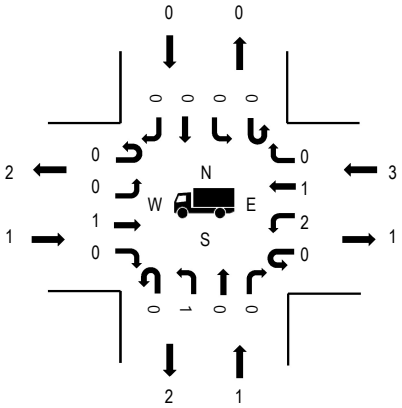

Pedestrians

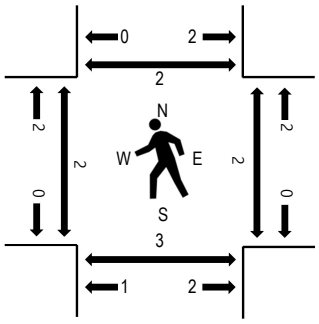

Note: Total study counts contained in parentheses.

	HV%	PHF
EB	0.7%	0.75
WB	3.5%	0.83
NB	4.0%	0.75
SB	0.0%	0.68
All	1.7%	0.84

Traffic Counts - Motorized Vehicles

Interval Start Time	MAY ST Eastbound				MAY ST Westbound				30TH ST Northbound				30TH ST Southbound				Total	Rolling Hour
	U-Turn	Left	Thru	Right	U-Turn	Left	Thru	Right	U-Turn	Left	Thru	Right	U-Turn	Left	Thru	Right		
7:00 AM	0	0	5	1	0	0	1	0	0	0	0	0	0	0	0	2	9	222
7:05 AM	0	0	6	0	0	1	2	0	0	1	0	0	0	0	0	2	12	244
7:10 AM	0	1	4	0	0	0	1	2	0	0	0	1	0	1	0	2	12	260
7:15 AM	0	0	5	1	0	0	6	0	0	1	0	2	0	2	0	1	18	275
7:20 AM	0	1	7	0	0	0	3	0	0	2	0	0	0	1	0	1	15	290
7:25 AM	0	2	9	1	0	0	3	0	0	3	0	2	0	0	0	3	23	297
7:30 AM	0	0	7	0	0	0	4	1	0	1	0	0	0	1	0	5	19	294
7:35 AM	0	1	7	3	0	0	5	1	0	0	0	1	0	1	0	0	19	289
7:40 AM	0	3	8	3	0	0	8	1	0	0	0	2	0	0	0	2	27	286
7:45 AM	0	1	5	1	0	1	6	2	0	0	0	3	0	2	0	0	21	277
7:50 AM	0	0	14	0	0	2	5	0	0	0	0	2	0	2	0	0	25	272
7:55 AM	0	1	8	0	0	0	8	0	0	0	0	2	0	1	0	2	22	261
8:00 AM	0	1	14	0	0	0	4	0	0	3	1	0	0	4	0	4	31	251
8:05 AM	0	1	14	0	0	2	6	1	0	1	0	0	0	2	0	1	28	
8:10 AM	0	0	15	1	0	0	6	0	0	1	0	3	0	1	0	0	27	
8:15 AM	0	1	19	0	0	2	7	0	0	0	0	0	0	3	0	1	33	
8:20 AM	0	1	11	0	0	1	7	2	0	0	0	0	0	0	0	0	22	
8:25 AM	0	0	12	0	0	1	7	0	0	0	0	0	0	0	0	0	20	
8:30 AM	0	1	6	1	0	0	3	0	0	0	0	1	0	1	0	1	14	
8:35 AM	0	0	8	2	0	0	4	0	0	1	0	0	0	1	0	0	16	
8:40 AM	0	1	9	0	0	1	4	2	0	0	0	1	0	0	0	0	18	
8:45 AM	0	0	8	2	0	0	3	0	0	0	0	0	0	1	0	2	16	
8:50 AM	0	0	8	0	0	1	1	1	0	0	0	1	0	2	0	0	14	
8:55 AM	0	0	8	0	0	1	3	0	0	0	0	0	0	0	0	0	12	
Count Total	0	16	217	16	0	13	107	13	0	14	1	21	0	26	0	29	473	
Peak Hour	0	12	131	9	0	8	69	8	0	9	1	15	0	17	0	18	297	

Traffic Counts - Heavy Vehicles, Bicycles on Road, and Pedestrians/Bicycles on Crosswalk

Interval Start Time	Heavy Vehicles					Interval Start Time	Bicycles on Roadway					Interval Start Time	Pedestrians/Bicycles on Crosswalk				
	EB	NB	WB	SB	Total		EB	NB	WB	SB	Total		EB	NB	WB	SB	Total
7:00 AM	0	0	0	0	0	7:00 AM	0	0	0	0	0	7:00 AM	0	1	0	0	1
7:05 AM	0	0	0	0	0	7:05 AM	0	0	0	0	0	7:05 AM	0	0	0	0	0
7:10 AM	0	0	0	0	0	7:10 AM	0	0	0	0	0	7:10 AM	0	0	0	0	0
7:15 AM	0	0	1	0	1	7:15 AM	0	0	0	0	0	7:15 AM	0	0	0	0	0
7:20 AM	0	0	0	0	0	7:20 AM	0	0	0	0	0	7:20 AM	0	0	0	0	0
7:25 AM	0	0	0	0	0	7:25 AM	0	0	0	0	0	7:25 AM	0	0	0	0	0
7:30 AM	0	0	0	0	0	7:30 AM	0	1	0	0	1	7:30 AM	0	1	1	0	2
7:35 AM	0	0	1	0	1	7:35 AM	0	0	0	0	0	7:35 AM	2	0	1	2	5
7:40 AM	0	0	0	0	0	7:40 AM	0	0	0	0	0	7:40 AM	0	0	0	0	0
7:45 AM	0	0	0	0	0	7:45 AM	1	2	0	0	3	7:45 AM	0	0	0	0	0
7:50 AM	0	0	1	0	1	7:50 AM	0	1	0	0	1	7:50 AM	0	0	0	0	0
7:55 AM	0	0	0	0	0	7:55 AM	0	1	0	0	1	7:55 AM	0	0	0	0	0
8:00 AM	0	0	0	0	0	8:00 AM	0	0	0	0	0	8:00 AM	0	0	0	0	0
8:05 AM	1	1	0	0	2	8:05 AM	0	0	0	0	0	8:05 AM	0	1	0	0	1
8:10 AM	0	0	0	0	0	8:10 AM	0	0	0	0	0	8:10 AM	0	1	0	0	1
8:15 AM	0	0	0	0	0	8:15 AM	0	1	0	0	1	8:15 AM	0	0	0	0	0
8:20 AM	0	0	1	0	1	8:20 AM	0	0	1	0	1	8:20 AM	0	0	0	0	0
8:25 AM	0	0	1	0	1	8:25 AM	0	0	0	0	0	8:25 AM	0	0	0	0	0
8:30 AM	0	0	0	0	0	8:30 AM	0	0	0	0	0	8:30 AM	0	0	0	0	0
8:35 AM	0	0	0	0	0	8:35 AM	0	0	0	0	0	8:35 AM	0	0	0	0	0
8:40 AM	0	0	0	0	0	8:40 AM	0	0	0	0	0	8:40 AM	0	0	0	0	0
8:45 AM	0	0	0	0	0	8:45 AM	0	0	0	0	0	8:45 AM	0	0	0	0	0
8:50 AM	0	0	0	0	0	8:50 AM	0	0	1	0	1	8:50 AM	0	0	0	0	0
8:55 AM	0	0	0	0	0	8:55 AM	0	0	0	0	0	8:55 AM	0	0	0	0	0
Count Total	1	1	5	0	7	Count Total	1	6	2	0	9	Count Total	2	4	2	2	10
Peak Hour	1	1	3	0	5	Peak Hour	1	6	1	0	8	Peak Hour	2	3	2	2	9

All Traffic Data Services Inc.

(303) 216-2439
www.alltrafficdata.net

Location: FRANKTON RD & MAY ST AM
Date: Tuesday, February 25, 2020
Peak Hour: 07:20 AM - 08:20 AM
Peak 15-Minutes: 08:05 AM - 08:20 AM

Peak Hour

Motorized Vehicles

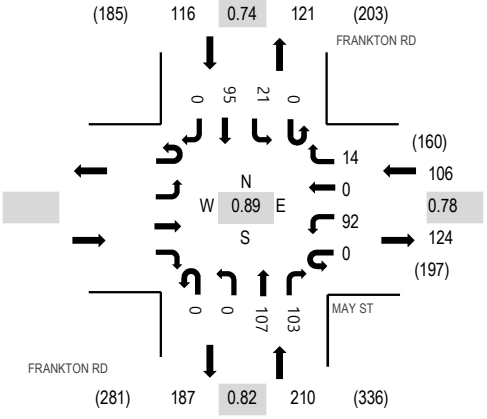

Heavy Vehicles

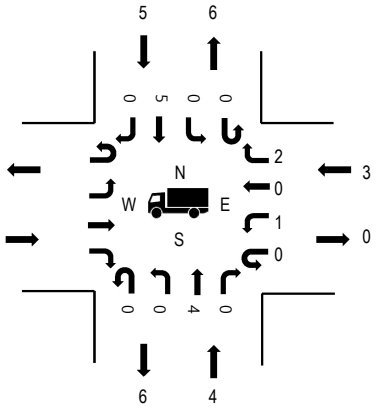

Pedestrians

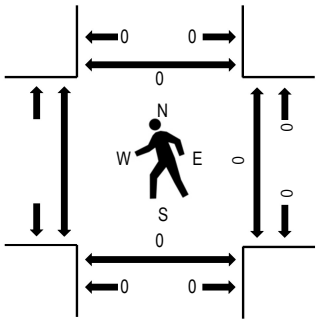

Note: Total study counts contained in parentheses.

	HV%	PHF
EB		
WB	2.8%	0.78
NB	1.9%	0.82
SB	4.3%	0.74
All	2.8%	0.89

Traffic Counts - Motorized Vehicles

Interval Start Time	Eastbound U-Turn	Eastbound Left	Eastbound Thru	Eastbound Right	MAY ST Westbound U-Turn	MAY ST Westbound Left	MAY ST Westbound Thru	MAY ST Westbound Right	FRANKTON RD Northbound U-Turn	FRANKTON RD Northbound Left	FRANKTON RD Northbound Thru	FRANKTON RD Northbound Right	FRANKTON RD Southbound U-Turn	FRANKTON RD Southbound Left	FRANKTON RD Southbound Thru	FRANKTON RD Southbound Right	Total	Rolling Hour
7:00 AM					0	3	0	0	0	0	4	3	0	3	1	0	14	359
7:05 AM					0	4	0	1	0	0	6	3	0	0	5	0	19	376
7:10 AM					0	5	0	0	0	0	5	5	0	0	7	0	22	404
7:15 AM					0	7	0	0	0	0	6	4	0	2	6	0	25	418
7:20 AM					0	10	0	0	0	0	10	0	0	2	6	0	28	432
7:25 AM					0	13	0	1	0	0	8	11	0	3	3	0	39	428
7:30 AM					0	9	0	1	0	0	9	4	0	2	11	0	36	413
7:35 AM					0	4	0	1	0	0	13	7	0	0	8	0	33	401
7:40 AM					0	6	0	3	0	0	12	15	0	0	5	0	41	392
7:45 AM					0	8	0	1	0	0	14	4	0	0	7	0	34	361
7:50 AM					0	3	0	1	0	0	7	7	0	4	9	0	31	353
7:55 AM					0	6	0	3	0	0	9	12	0	1	6	0	37	340
8:00 AM					0	8	0	0	0	0	4	8	0	1	10	0	31	322
8:05 AM					0	11	0	0	0	0	6	12	0	2	16	0	47	
8:10 AM					0	6	0	1	0	0	8	11	0	2	8	0	36	
8:15 AM					0	8	0	2	0	0	7	12	0	4	6	0	39	
8:20 AM					0	2	0	2	0	0	5	9	0	1	5	0	24	
8:25 AM					0	5	0	1	0	0	8	3	0	2	5	0	24	
8:30 AM					0	3	0	1	0	0	4	9	0	0	7	0	24	
8:35 AM					0	3	0	2	0	0	6	4	0	3	6	0	24	
8:40 AM					0	2	0	2	0	0	3	2	0	0	1	0	10	
8:45 AM					0	2	0	3	0	0	6	6	0	1	8	0	26	
8:50 AM					0	1	0	0	0	0	7	5	0	2	3	0	18	
8:55 AM					0	3	0	2	0	0	8	5	0	1	0	0	19	
Count Total					0	132	0	28	0	0	175	161	0	36	149	0	681	
Peak Hour					0	92	0	14	0	0	107	103	0	21	95	0	432	

Traffic Counts - Heavy Vehicles, Bicycles on Road, and Pedestrians/Bicycles on Crosswalk

Interval Start Time	Heavy Vehicles					Interval Start Time	Bicycles on Roadway					Interval Start Time	Pedestrians/Bicycles on Crosswalk				
	EB	NB	WB	SB	Total		EB	NB	WB	SB	Total		EB	NB	WB	SB	Total
7:00 AM		0	0	0	0	7:00 AM		0	0	0	0	7:00 AM		0	0	0	0
7:05 AM		0	0	0	0	7:05 AM		0	0	0	0	7:05 AM		0	0	0	0
7:10 AM		0	0	0	0	7:10 AM		0	0	0	0	7:10 AM		0	0	0	0
7:15 AM		0	1	0	1	7:15 AM		0	0	0	0	7:15 AM		0	0	0	0
7:20 AM		1	0	0	1	7:20 AM		0	0	0	0	7:20 AM		0	0	0	0
7:25 AM		0	0	1	1	7:25 AM		0	0	0	0	7:25 AM		0	0	0	0
7:30 AM		0	0	1	1	7:30 AM		0	0	0	0	7:30 AM		0	0	0	0
7:35 AM		0	0	0	0	7:35 AM		0	0	0	0	7:35 AM		0	0	0	0
7:40 AM		0	1	0	1	7:40 AM		0	0	0	0	7:40 AM		0	0	0	0
7:45 AM		2	0	1	3	7:45 AM		0	0	0	0	7:45 AM		0	0	0	0
7:50 AM		1	0	1	2	7:50 AM		0	0	0	0	7:50 AM		0	0	0	0
7:55 AM		0	0	0	0	7:55 AM		0	0	0	0	7:55 AM		0	0	0	0
8:00 AM		0	0	0	0	8:00 AM		0	0	0	0	8:00 AM		0	0	0	0
8:05 AM		0	0	0	0	8:05 AM		0	0	0	0	8:05 AM		0	0	0	0
8:10 AM		0	2	1	3	8:10 AM		0	0	0	0	8:10 AM		0	0	0	0
8:15 AM		0	0	0	0	8:15 AM		0	0	0	0	8:15 AM		0	0	0	0
8:20 AM		0	0	0	0	8:20 AM		0	0	0	0	8:20 AM		0	0	0	0
8:25 AM		1	0	0	1	8:25 AM		0	0	0	0	8:25 AM		0	0	0	0
8:30 AM		0	0	0	0	8:30 AM		0	0	0	0	8:30 AM		0	0	0	0
8:35 AM		1	0	0	1	8:35 AM		0	0	0	0	8:35 AM		0	0	0	0
8:40 AM		0	0	0	0	8:40 AM		0	0	0	0	8:40 AM		0	0	0	0
8:45 AM		0	0	0	0	8:45 AM		0	0	0	0	8:45 AM		0	0	0	0
8:50 AM		0	0	0	0	8:50 AM		0	0	0	0	8:50 AM		0	0	0	0
8:55 AM		0	0	0	0	8:55 AM		0	0	0	0	8:55 AM		0	0	0	0
Count Total		6	4	5	15	Count Total		0	0	0	0	Count Total		0	0	0	0
Peak Hour		4	3	5	12	Peak Hour		0	0	0	0	Peak Hour		0	0	0	0

All Traffic Data Services Inc.

(303) 216-2439
www.alltrafficdata.net

Location: RAND RD & MAY ST AM
Date: Tuesday, February 25, 2020
Peak Hour: 07:30 AM - 08:30 AM
Peak 15-Minutes: 08:05 AM - 08:20 AM

Peak Hour

Motorized Vehicles

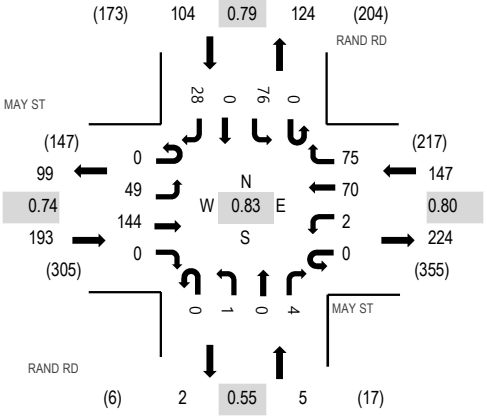

Heavy Vehicles

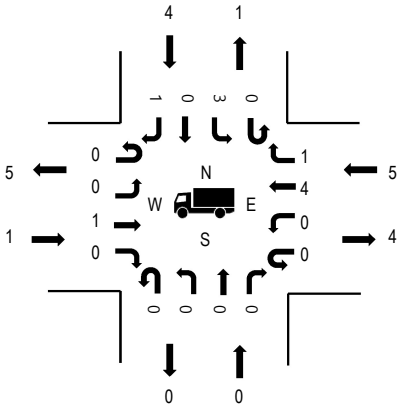

Pedestrians

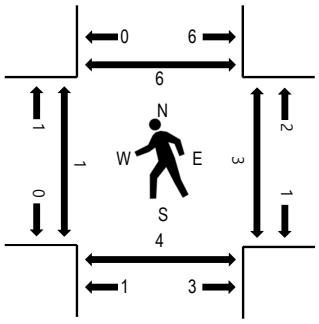

Note: Total study counts contained in parentheses.

	HV%	PHF
EB	0.5%	0.74
WB	3.4%	0.80
NB	0.0%	0.55
SB	3.8%	0.79
All	2.2%	0.83

Traffic Counts - Motorized Vehicles

Interval Start Time	MAY ST Eastbound				MAY ST Westbound				RAND RD Northbound				RAND RD Southbound				Total	Rolling Hour
	U-Turn	Left	Thru	Right	U-Turn	Left	Thru	Right	U-Turn	Left	Thru	Right	U-Turn	Left	Thru	Right		
7:00 AM	0	2	4	0	0	0	4	3	0	0	0	0	0	3	0	0	16	331
7:05 AM	0	5	2	0	0	0	1	1	0	0	1	0	0	3	0	2	15	352
7:10 AM	0	3	3	0	0	1	3	2	0	0	1	1	0	2	0	2	18	379
7:15 AM	0	2	10	0	0	0	3	2	0	1	0	1	0	1	0	1	21	408
7:20 AM	0	4	5	0	0	0	1	3	0	0	0	1	0	8	0	1	23	434
7:25 AM	0	4	10	0	0	2	2	2	0	0	0	1	0	3	0	1	25	448
7:30 AM	0	6	6	0	0	0	3	6	0	0	0	0	0	7	0	1	29	449
7:35 AM	0	5	7	0	0	0	4	4	0	0	0	1	0	15	0	5	41	448
7:40 AM	0	0	8	0	0	1	9	6	0	0	0	0	0	0	0	4	28	428
7:45 AM	0	6	10	0	0	1	5	7	0	0	0	1	0	11	0	0	41	422
7:50 AM	0	2	17	0	0	0	5	4	0	0	0	1	0	6	0	2	37	399
7:55 AM	0	6	8	0	0	0	4	6	0	1	0	0	0	7	0	5	37	386
8:00 AM	0	3	17	0	0	0	5	6	0	0	0	0	0	6	0	0	37	381
8:05 AM	0	2	15	0	0	0	6	8	0	0	0	1	0	9	0	1	42	
8:10 AM	0	3	22	0	0	0	4	7	0	0	0	0	0	5	0	6	47	
8:15 AM	0	5	20	0	0	0	9	6	0	0	0	0	0	5	0	2	47	
8:20 AM	0	6	9	0	0	0	11	8	0	0	0	0	0	2	0	1	37	
8:25 AM	0	5	5	0	0	0	5	7	0	0	0	0	0	3	0	1	26	
8:30 AM	0	2	6	0	0	0	2	6	0	0	0	0	0	10	0	2	28	
8:35 AM	0	2	7	0	0	0	3	2	0	0	0	1	0	5	0	1	21	
8:40 AM	0	2	7	0	0	1	4	6	0	0	0	0	0	1	0	1	22	
8:45 AM	0	3	4	0	0	0	3	2	0	0	0	0	0	3	0	3	18	
8:50 AM	0	3	8	0	0	0	2	5	0	0	1	1	0	3	0	1	24	
8:55 AM	0	7	7	0	0	0	2	2	0	0	2	0	0	10	0	2	32	
Count Total	0	88	217	0	0	6	100	111	0	2	5	10	0	128	0	45	712	
Peak Hour	0	49	144	0	0	2	70	75	0	1	0	4	0	76	0	28	449	

Traffic Counts - Heavy Vehicles, Bicycles on Road, and Pedestrians/Bicycles on Crosswalk

Interval Start Time	Heavy Vehicles					Interval Start Time	Bicycles on Roadway					Interval Start Time	Pedestrians/Bicycles on Crosswalk				
	EB	NB	WB	SB	Total		EB	NB	WB	SB	Total		EB	NB	WB	SB	Total
7:00 AM	0	0	1	0	1	7:00 AM	0	0	0	0	0	7:00 AM	0	1	0	0	1
7:05 AM	0	0	0	0	0	7:05 AM	0	0	0	0	0	7:05 AM	1	0	0	0	1
7:10 AM	0	0	0	1	1	7:10 AM	0	0	0	0	0	7:10 AM	0	0	0	0	0
7:15 AM	0	0	0	0	0	7:15 AM	0	0	0	0	0	7:15 AM	0	0	0	0	0
7:20 AM	0	0	0	0	0	7:20 AM	0	0	0	0	0	7:20 AM	0	0	0	0	0
7:25 AM	0	0	0	0	0	7:25 AM	0	0	0	0	0	7:25 AM	0	0	0	1	1
7:30 AM	0	0	0	0	0	7:30 AM	1	0	0	0	1	7:30 AM	0	0	0	0	0
7:35 AM	0	0	1	0	1	7:35 AM	0	0	1	0	1	7:35 AM	0	2	2	0	4
7:40 AM	0	0	0	0	0	7:40 AM	0	0	0	0	0	7:40 AM	0	0	0	1	1
7:45 AM	0	0	0	2	2	7:45 AM	2	0	0	0	2	7:45 AM	0	0	0	0	0
7:50 AM	0	0	1	0	1	7:50 AM	2	0	0	0	2	7:50 AM	0	0	0	1	1
7:55 AM	0	0	0	0	0	7:55 AM	2	0	0	0	2	7:55 AM	0	0	1	3	4
8:00 AM	0	0	0	0	0	8:00 AM	0	0	0	0	0	8:00 AM	1	0	0	0	1
8:05 AM	1	0	1	1	3	8:05 AM	0	0	0	0	0	8:05 AM	0	1	0	1	2
8:10 AM	0	0	0	0	0	8:10 AM	0	0	0	0	0	8:10 AM	0	0	0	0	0
8:15 AM	0	0	0	0	0	8:15 AM	0	0	1	0	1	8:15 AM	0	1	0	0	1
8:20 AM	0	0	1	0	1	8:20 AM	0	0	1	0	1	8:20 AM	0	0	0	0	0
8:25 AM	0	0	1	1	2	8:25 AM	0	0	0	0	0	8:25 AM	0	0	0	0	0
8:30 AM	0	0	0	0	0	8:30 AM	0	0	0	0	0	8:30 AM	0	0	0	0	0
8:35 AM	0	0	0	0	0	8:35 AM	0	0	0	0	0	8:35 AM	0	0	0	0	0
8:40 AM	0	0	0	0	0	8:40 AM	0	0	0	0	0	8:40 AM	0	0	0	0	0
8:45 AM	0	0	0	0	0	8:45 AM	0	0	0	0	0	8:45 AM	0	1	0	0	1
8:50 AM	0	0	0	0	0	8:50 AM	0	0	1	0	1	8:50 AM	0	0	0	0	0
8:55 AM	0	0	0	1	1	8:55 AM	0	0	0	0	0	8:55 AM	0	0	0	0	0
Count Total	1	0	6	6	13	Count Total	7	0	4	0	11	Count Total	2	6	3	7	18
Peak Hour	1	0	5	4	10	Peak Hour	7	0	3	0	10	Peak Hour	1	4	3	6	14

All Traffic Data Services Inc.

(303) 216-2439
www.alltrafficdata.net

Location: 30TH ST & MAY ST PM
Date: Tuesday, February 25, 2020
Peak Hour: 04:50 PM - 05:50 PM
Peak 15-Minutes: 05:15 PM - 05:30 PM

Peak Hour

Motorized Vehicles

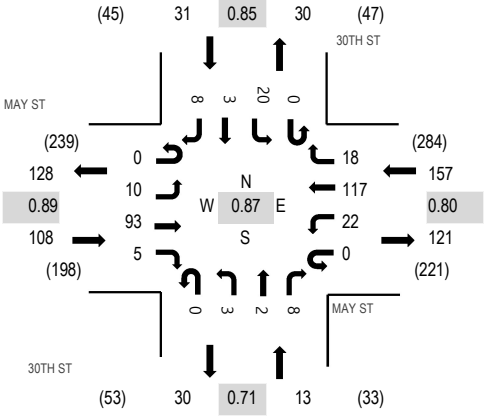

Heavy Vehicles

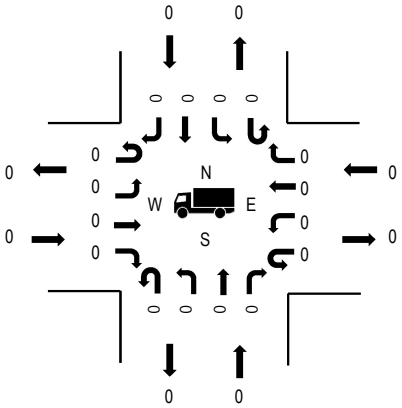

Pedestrians

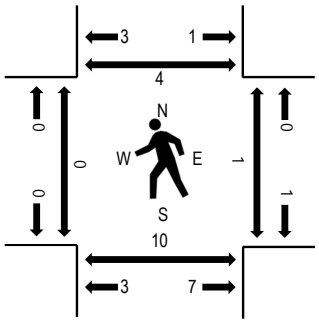

Note: Total study counts contained in parentheses.

	HV%	PHF
EB	0.0%	0.89
WB	0.0%	0.80
NB	0.0%	0.71
SB	0.0%	0.85
All	0.0%	0.87

Traffic Counts - Motorized Vehicles

Interval Start Time	MAY ST Eastbound				MAY ST Westbound				30TH ST Northbound				30TH ST Southbound				Total	Rolling Hour
	U-Turn	Left	Thru	Right	U-Turn	Left	Thru	Right	U-Turn	Left	Thru	Right	U-Turn	Left	Thru	Right		
4:00 PM	0	0	5	0	0	0	5	0	0	2	0	2	0	0	0	0	14	252
4:05 PM	0	1	5	0	0	4	4	1	0	2	0	0	0	1	0	1	19	272
4:10 PM	0	1	8	1	0	0	8	1	0	0	0	1	0	0	0	0	20	281
4:15 PM	0	0	7	0	0	1	12	0	0	1	0	2	0	1	0	0	24	278
4:20 PM	0	0	7	1	0	1	11	1	0	1	0	1	0	0	0	0	23	281
4:25 PM	0	1	11	0	0	5	7	2	0	1	0	0	0	2	0	1	30	288
4:30 PM	0	1	3	1	0	2	9	1	0	0	0	1	0	2	0	0	20	290
4:35 PM	0	0	3	0	0	2	10	2	0	0	0	0	0	0	0	0	17	290
4:40 PM	0	0	7	0	0	0	7	1	0	1	0	1	0	1	0	0	18	295
4:45 PM	0	2	2	1	0	1	7	0	0	0	0	1	0	0	0	0	14	307
4:50 PM	0	3	10	0	0	1	14	3	0	1	0	1	0	0	0	0	33	309
4:55 PM	0	0	7	0	0	1	9	0	0	0	0	1	0	2	0	0	20	297
5:00 PM	0	1	9	0	0	6	13	1	0	0	0	0	0	3	0	1	34	308
5:05 PM	0	1	14	1	0	0	9	0	0	0	0	1	0	2	0	0	28	
5:10 PM	0	0	5	0	0	2	6	0	0	0	0	0	0	3	0	1	17	
5:15 PM	0	0	4	1	0	3	12	3	0	0	0	1	0	2	0	1	27	
5:20 PM	0	2	5	1	0	4	12	3	0	0	0	0	0	2	1	0	30	
5:25 PM	0	0	11	2	0	2	11	0	0	0	1	2	0	1	1	1	32	
5:30 PM	0	0	6	0	0	1	8	1	0	1	1	0	0	2	0	0	20	
5:35 PM	0	1	5	0	0	1	10	4	0	1	0	0	0	0	0	0	22	
5:40 PM	0	2	10	0	0	1	8	2	0	0	0	2	0	3	1	1	30	
5:45 PM	0	0	7	0	0	0	5	1	0	0	0	0	0	0	0	3	16	
5:50 PM	0	0	11	1	0	1	6	0	0	0	0	0	0	2	0	0	21	
5:55 PM	0	0	10	0	0	1	12	2	0	1	0	2	0	1	0	2	31	
Count Total	0	16	172	10	0	40	215	29	0	12	2	19	0	30	3	12	560	
Peak Hour	0	10	93	5	0	22	117	18	0	3	2	8	0	20	3	8	309	

Traffic Counts - Heavy Vehicles, Bicycles on Road, and Pedestrians/Bicycles on Crosswalk

Interval Start Time	Heavy Vehicles					Interval Start Time	Bicycles on Roadway					Interval Start Time	Pedestrians/Bicycles on Crosswalk				
	EB	NB	WB	SB	Total		EB	NB	WB	SB	Total		EB	NB	WB	SB	Total
4:00 PM	0	0	0	0	0	4:00 PM	0	0	2	0	2	4:00 PM	0	0	0	0	0
4:05 PM	0	0	0	0	0	4:05 PM	0	0	0	0	0	4:05 PM	0	0	0	0	0
4:10 PM	0	0	0	0	0	4:10 PM	0	0	0	0	0	4:10 PM	0	2	0	0	2
4:15 PM	0	0	0	0	0	4:15 PM	0	0	0	0	0	4:15 PM	0	1	0	0	1
4:20 PM	0	0	0	0	0	4:20 PM	0	0	0	0	0	4:20 PM	0	1	0	0	1
4:25 PM	0	0	0	0	0	4:25 PM	1	0	0	0	1	4:25 PM	0	1	0	0	1
4:30 PM	0	0	0	0	0	4:30 PM	0	0	1	0	1	4:30 PM	1	0	0	1	2
4:35 PM	0	0	0	0	0	4:35 PM	0	0	0	0	0	4:35 PM	0	0	2	0	2
4:40 PM	0	1	0	0	1	4:40 PM	0	0	0	0	0	4:40 PM	0	0	0	0	0
4:45 PM	0	0	0	0	0	4:45 PM	0	0	0	0	0	4:45 PM	0	0	0	0	0
4:50 PM	0	0	0	0	0	4:50 PM	0	0	0	0	0	4:50 PM	0	3	0	0	3
4:55 PM	0	0	0	0	0	4:55 PM	0	0	0	0	0	4:55 PM	0	0	0	0	0
5:00 PM	0	0	0	0	0	5:00 PM	0	0	0	0	0	5:00 PM	0	0	0	0	0
5:05 PM	0	0	0	0	0	5:05 PM	0	0	0	0	0	5:05 PM	0	1	0	1	2
5:10 PM	0	0	0	0	0	5:10 PM	0	0	0	0	0	5:10 PM	0	0	0	2	2
5:15 PM	0	0	0	0	0	5:15 PM	0	0	0	0	0	5:15 PM	0	0	0	0	0
5:20 PM	0	0	0	0	0	5:20 PM	0	0	0	0	0	5:20 PM	0	2	0	0	2
5:25 PM	0	0	0	0	0	5:25 PM	0	0	1	0	1	5:25 PM	0	0	1	0	1
5:30 PM	0	0	0	0	0	5:30 PM	0	0	0	0	0	5:30 PM	0	0	0	0	0
5:35 PM	0	0	0	0	0	5:35 PM	0	0	0	0	0	5:35 PM	0	2	0	0	2
5:40 PM	0	0	0	0	0	5:40 PM	0	0	0	0	0	5:40 PM	0	2	0	1	3
5:45 PM	0	0	0	0	0	5:45 PM	0	0	0	0	0	5:45 PM	0	0	0	0	0
5:50 PM	0	0	0	0	0	5:50 PM	0	0	0	0	0	5:50 PM	0	1	0	0	1
5:55 PM	0	0	0	0	0	5:55 PM	0	0	0	0	0	5:55 PM	0	0	0	0	0
Count Total	0	1	0	0	1	Count Total	1	0	4	0	5	Count Total	1	16	3	5	25
Peak Hour	0	0	0	0	0	Peak Hour	0	0	1	0	1	Peak Hour	0	10	1	4	15

All Traffic Data Services Inc.

(303) 216-2439
www.alltrafficdata.net

Location: FRANKTON RD & MAY ST PM
Date: Tuesday, February 25, 2020
Peak Hour: 04:30 PM - 05:30 PM
Peak 15-Minutes: 04:55 PM - 05:10 PM

Peak Hour

Motorized Vehicles

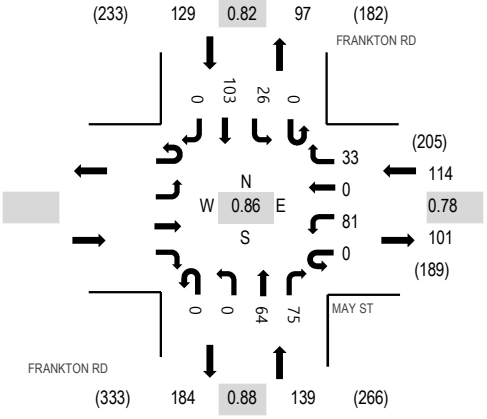

Note: Total study counts contained in parentheses.

	HV%	PHF
EB		
WB	0.9%	0.78
NB	0.7%	0.88
SB	1.6%	0.82
All	1.0%	0.86

Heavy Vehicles

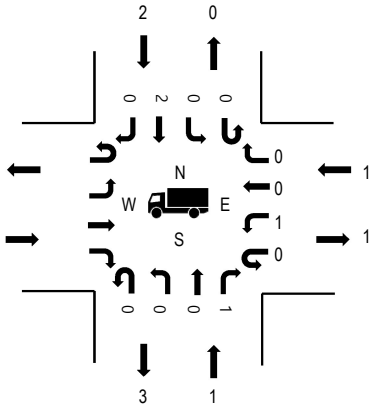

Pedestrians

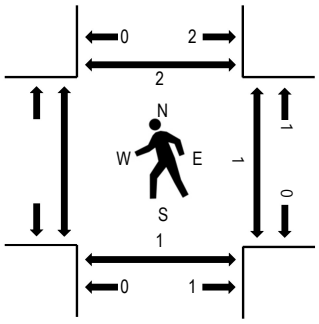

Traffic Counts - Motorized Vehicles

Interval Start Time	Eastbound U-Turn	Eastbound Left	Eastbound Thru	Eastbound Right	MAY ST Westbound U-Turn	MAY ST Westbound Left	MAY ST Westbound Thru	MAY ST Westbound Right	FRANKTON RD Northbound U-Turn	FRANKTON RD Northbound Left	FRANKTON RD Northbound Thru	FRANKTON RD Northbound Right	FRANKTON RD Southbound U-Turn	FRANKTON RD Southbound Left	FRANKTON RD Southbound Thru	FRANKTON RD Southbound Right	Total	Rolling Hour
4:00 PM					0	4	0	0	0	0	9	3	0	1	6	0	23	342
4:05 PM					0	2	0	3	0	0	8	3	0	2	8	0	26	358
4:10 PM					0	4	0	2	0	0	6	8	0	3	5	0	28	372
4:15 PM					0	11	0	3	0	0	3	4	0	3	10	0	34	370
4:20 PM					0	7	0	3	0	0	6	6	0	4	4	0	30	365
4:25 PM					0	9	0	0	0	0	4	7	0	3	2	0	25	370
4:30 PM					0	7	0	2	0	0	3	8	0	1	6	0	27	382
4:35 PM					0	8	0	1	0	0	4	3	0	1	9	0	26	375
4:40 PM					0	5	0	1	0	0	7	4	0	1	12	0	30	374
4:45 PM					0	4	0	2	0	0	11	8	0	2	5	0	32	371
4:50 PM					0	6	0	7	0	0	3	6	0	2	5	0	29	364
4:55 PM					0	8	0	4	0	0	5	8	0	2	5	0	32	363
5:00 PM					0	9	0	3	0	0	3	9	0	3	12	0	39	362
5:05 PM					0	7	0	2	0	0	7	8	0	5	11	0	40	
5:10 PM					0	3	0	2	0	0	8	4	0	1	8	0	26	
5:15 PM					0	7	0	5	0	0	3	5	0	2	7	0	29	
5:20 PM					0	3	0	2	0	0	9	7	0	2	12	0	35	
5:25 PM					0	14	0	2	0	0	1	5	0	4	11	0	37	
5:30 PM					0	5	0	2	0	0	5	4	0	1	3	0	20	
5:35 PM					0	6	0	2	0	0	4	4	0	0	9	0	25	
5:40 PM					0	5	0	2	0	0	1	8	0	2	9	0	27	
5:45 PM					0	4	0	1	0	0	7	4	0	1	8	0	25	
5:50 PM					0	5	0	1	0	0	5	7	0	2	8	0	28	
5:55 PM					0	6	0	4	0	0	4	7	0	1	9	0	31	
Count Total					0	149	0	56	0	0	126	140	0	49	184	0	704	
Peak Hour					0	81	0	33	0	0	64	75	0	26	103	0	382	

Traffic Counts - Heavy Vehicles, Bicycles on Road, and Pedestrians/Bicycles on Crosswalk

Interval Start Time	Heavy Vehicles					Interval Start Time	Bicycles on Roadway					Interval Start Time	Pedestrians/Bicycles on Crosswalk				
	EB	NB	WB	SB	Total		EB	NB	WB	SB	Total		EB	NB	WB	SB	Total
4:00 PM		0	0	0	0	4:00 PM		0	0	0	0	4:00 PM		0	0	0	0
4:05 PM		0	0	0	0	4:05 PM		1	0	0	1	4:05 PM		0	0	0	0
4:10 PM		0	0	0	0	4:10 PM		0	0	0	0	4:10 PM		0	0	0	0
4:15 PM		0	0	1	1	4:15 PM		0	0	0	0	4:15 PM		0	0	0	0
4:20 PM		0	0	0	0	4:20 PM		1	0	0	1	4:20 PM		0	0	0	0
4:25 PM		0	0	0	0	4:25 PM		0	0	0	0	4:25 PM		0	0	0	0
4:30 PM		1	0	0	1	4:30 PM		0	0	0	0	4:30 PM		0	0	0	0
4:35 PM		0	1	0	1	4:35 PM		1	0	0	1	4:35 PM		0	0	0	0
4:40 PM		0	0	0	0	4:40 PM		0	0	0	0	4:40 PM		0	0	0	0
4:45 PM		0	0	0	0	4:45 PM		1	0	0	1	4:45 PM		0	0	0	0
4:50 PM		0	0	0	0	4:50 PM		0	0	0	0	4:50 PM		0	0	0	0
4:55 PM		0	0	0	0	4:55 PM		0	0	0	0	4:55 PM		0	0	0	0
5:00 PM		0	0	0	0	5:00 PM		0	0	0	0	5:00 PM		1	0	0	1
5:05 PM		0	0	0	0	5:05 PM		0	0	0	0	5:05 PM		0	0	0	0
5:10 PM		0	0	0	0	5:10 PM		0	0	0	0	5:10 PM		0	1	0	1
5:15 PM		0	0	1	1	5:15 PM		0	0	0	0	5:15 PM		0	0	2	2
5:20 PM		0	0	1	1	5:20 PM		0	0	0	0	5:20 PM		0	0	0	0
5:25 PM		0	0	0	0	5:25 PM		0	0	0	0	5:25 PM		0	0	0	0
5:30 PM		0	0	0	0	5:30 PM		0	0	0	0	5:30 PM		0	0	0	0
5:35 PM		0	0	0	0	5:35 PM		0	0	0	0	5:35 PM		0	0	0	0
5:40 PM		0	0	0	0	5:40 PM		0	0	0	0	5:40 PM		0	0	0	0
5:45 PM		1	0	0	1	5:45 PM		0	0	0	0	5:45 PM		0	0	2	2
5:50 PM		0	0	0	0	5:50 PM		0	0	0	0	5:50 PM		0	0	0	0
5:55 PM		0	0	0	0	5:55 PM		0	0	0	0	5:55 PM		0	0	0	0
Count Total		2	1	3	6	Count Total		4	0	0	4	Count Total		1	1	4	6
Peak Hour		1	1	2	4	Peak Hour		2	0	0	2	Peak Hour		1	1	2	4

All Traffic Data Services Inc.

(303) 216-2439
www.alltrafficdata.net

Location: RAND RD & MAY ST PM
Date: Tuesday, February 25, 2020
Peak Hour: 04:50 PM - 05:50 PM
Peak 15-Minutes: 04:50 PM - 05:05 PM

Peak Hour

Motorized Vehicles

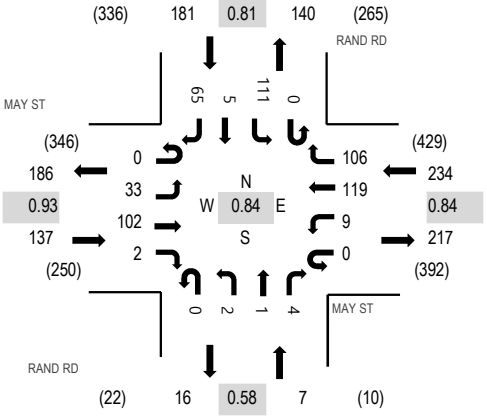

Heavy Vehicles

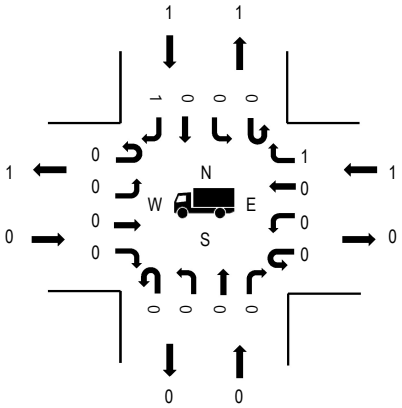

Pedestrians

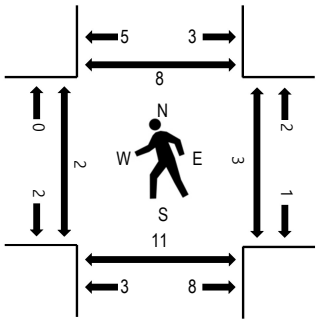

Note: Total study counts contained in parentheses.

	HV%	PHF
EB	0.0%	0.93
WB	0.4%	0.84
NB	0.0%	0.58
SB	0.6%	0.81
All	0.4%	0.84

Traffic Counts - Motorized Vehicles

Interval Start Time	MAY ST Eastbound				MAY ST Westbound				RAND RD Northbound				RAND RD Southbound				Total	Rolling Hour
	U-Turn	Left	Thru	Right	U-Turn	Left	Thru	Right	U-Turn	Left	Thru	Right	U-Turn	Left	Thru	Right		
4:00 PM	0	3	5	0	0	0	7	7	0	0	0	1	0	7	0	3	33	487
4:05 PM	0	4	5	0	0	0	5	6	0	0	0	0	0	8	0	5	33	508
4:10 PM	0	3	6	0	0	0	6	9	0	0	0	0	0	8	1	6	39	516
4:15 PM	0	4	11	0	0	0	13	2	0	1	0	0	0	8	0	4	43	527
4:20 PM	0	3	7	0	0	0	9	5	0	0	0	0	0	3	0	2	29	529
4:25 PM	0	6	6	0	0	1	11	4	0	0	0	0	0	7	1	4	40	546
4:30 PM	0	3	7	0	0	0	14	11	0	0	0	0	0	11	0	4	50	555
4:35 PM	0	0	3	0	0	0	10	5	0	0	0	0	0	7	0	7	32	544
4:40 PM	0	2	6	0	0	0	7	10	0	0	0	1	0	10	1	3	40	551
4:45 PM	0	0	5	1	0	1	4	8	0	0	0	0	0	9	0	8	36	554
4:50 PM	0	2	11	0	0	1	14	13	0	1	1	0	0	12	1	6	62	559
4:55 PM	0	5	6	0	0	0	7	11	0	0	0	0	0	15	0	6	50	541
5:00 PM	0	1	10	0	0	1	15	9	0	0	0	0	0	10	0	8	54	538
5:05 PM	0	1	13	0	0	1	5	9	0	0	0	0	0	10	0	2	41	
5:10 PM	0	1	11	0	0	1	9	11	0	0	0	1	0	11	0	5	50	
5:15 PM	0	2	6	0	0	2	16	5	0	0	0	0	0	6	1	7	45	
5:20 PM	0	3	7	1	0	1	14	6	0	1	0	0	0	8	0	5	46	
5:25 PM	0	2	11	0	0	1	7	10	0	0	0	2	0	11	1	4	49	
5:30 PM	0	6	6	0	0	0	6	11	0	0	0	0	0	4	1	5	39	
5:35 PM	0	4	3	1	0	1	14	6	0	0	0	0	0	7	0	3	39	
5:40 PM	0	2	12	0	0	0	7	7	0	0	0	0	0	6	1	8	43	
5:45 PM	0	4	6	0	0	0	5	8	0	0	0	1	0	11	0	6	41	
5:50 PM	0	3	8	0	0	0	7	12	0	0	0	0	0	11	0	3	44	
5:55 PM	0	6	6	0	0	0	12	9	0	0	0	0	0	9	0	5	47	
Count Total	0	70	177	3	0	11	224	194	0	3	1	6	0	209	8	119	1,025	
Peak Hour	0	33	102	2	0	9	119	106	0	2	1	4	0	111	5	65	559	

Traffic Counts - Heavy Vehicles, Bicycles on Road, and Pedestrians/Bicycles on Crosswalk

Interval Start Time	Heavy Vehicles					Interval Start Time	Bicycles on Roadway					Interval Start Time	Pedestrians/Bicycles on Crosswalk				
	EB	NB	WB	SB	Total		EB	NB	WB	SB	Total		EB	NB	WB	SB	Total
4:00 PM	0	0	0	0	0	4:00 PM	0	0	2	0	2	4:00 PM	0	1	0	0	1
4:05 PM	0	0	0	0	0	4:05 PM	0	0	0	0	0	4:05 PM	0	2	2	0	4
4:10 PM	0	0	0	0	0	4:10 PM	0	0	0	0	0	4:10 PM	0	2	0	0	2
4:15 PM	0	0	0	0	0	4:15 PM	0	0	1	0	1	4:15 PM	0	2	0	0	2
4:20 PM	0	0	0	0	0	4:20 PM	0	0	0	0	0	4:20 PM	0	1	0	0	1
4:25 PM	0	0	0	0	0	4:25 PM	1	0	0	0	1	4:25 PM	0	0	0	2	2
4:30 PM	0	0	0	0	0	4:30 PM	0	0	0	0	0	4:30 PM	0	0	0	1	1
4:35 PM	0	0	0	0	0	4:35 PM	0	0	0	0	0	4:35 PM	0	0	0	0	0
4:40 PM	1	0	0	0	1	4:40 PM	0	0	0	0	0	4:40 PM	0	0	0	0	0
4:45 PM	0	0	0	0	0	4:45 PM	0	0	0	0	0	4:45 PM	0	0	0	0	0
4:50 PM	0	0	0	0	0	4:50 PM	0	0	0	0	0	4:50 PM	0	0	0	0	0
4:55 PM	0	0	0	0	0	4:55 PM	0	0	0	0	0	4:55 PM	0	2	0	0	2
5:00 PM	0	0	0	1	1	5:00 PM	0	0	0	0	0	5:00 PM	0	0	0	0	0
5:05 PM	0	0	0	0	0	5:05 PM	0	0	0	0	0	5:05 PM	0	0	0	3	3
5:10 PM	0	0	0	0	0	5:10 PM	0	0	1	0	1	5:10 PM	0	0	0	0	0
5:15 PM	0	0	0	0	0	5:15 PM	0	0	1	0	1	5:15 PM	0	0	0	0	0
5:20 PM	0	0	0	0	0	5:20 PM	0	0	0	0	0	5:20 PM	0	1	1	0	2
5:25 PM	0	0	0	0	0	5:25 PM	0	0	1	0	1	5:25 PM	0	2	0	0	2
5:30 PM	0	0	0	0	0	5:30 PM	0	0	0	0	0	5:30 PM	0	1	0	1	2
5:35 PM	0	0	0	0	0	5:35 PM	0	0	0	0	0	5:35 PM	2	2	0	2	6
5:40 PM	0	0	0	0	0	5:40 PM	0	0	0	0	0	5:40 PM	0	2	2	1	5
5:45 PM	0	0	1	0	1	5:45 PM	0	0	0	0	0	5:45 PM	0	1	0	1	2
5:50 PM	0	0	0	0	0	5:50 PM	0	0	0	0	0	5:50 PM	0	1	0	0	1
5:55 PM	0	0	0	0	0	5:55 PM	0	0	0	0	0	5:55 PM	0	0	0	0	0
Count Total	1	0	1	1	3	Count Total	1	0	6	0	7	Count Total	2	20	5	11	38
Peak Hour	0	0	1	1	2	Peak Hour	0	0	3	0	3	Peak Hour	2	11	3	8	24

OREGON.. DEPARTMENT OF TRANSPORTATION - TRANSPORTATION DEVELOPMENT DIVISION
TRANSPORTATION DATA SECTION - CRASH ANAYLYSIS AND REPORTING UNIT
URBAN NON-SYSTEM CRASH LISTING

CITY OF HOOD RIVER, HOOD RIVER COUNTY

30TH ST at MAY ST, City of Hood River, Hood River County, 01/01/2013 to 12/31/2017

SER# INVEST RD DPT UNLOC?	S P E D	A L C	D R U G S	M J I N V	S C H L	W O R K	DATE DAY TIME LAT	CLASS DIST FROM LONG	CITY STREET FIRST STREET SECOND STREET LRS	RD CHAR DIRECT LOCTN	INT-TYPE (MEDIAN) LEGS (#LANES)	INT-REL TRAF- CONTL	OFFRD RNDBT DRVWY	WTHR SURF LIGHT	CRASH COLL SVRTY	V#	SPCL USE TRLR QTY OWNER TYPE	MOVE FROM TO	P#	PRTC TYPE	INJ SVRTY	A G E	S E X	LICNS RES	PED LOC	ERROR	ACT	EVENT	CAUSE

Disclaimer: The information contained in this report is compiled from individual driver and police crash reports submitted to the Oregon Department of Transportation as required in ORS 811.720. The Crash Analysis and Reporting Unit is committed to providing the highest quality crash data to customers. However, because submittal of crash report forms is the responsibility of the individual driver, the Crash Analysis and Reporting Unit can not guarantee that all qualifying crashes are represented nor can assurances be made that all details pertaining to a single crash are accurate. Note: Legislative changes to DMV's vehicle crash reporting requirement, effective 01/01/2004, may result in fewer property damage only crashes being eligible for inclusion in the Statewide Crash Data File.

Disclaimer: The information contained in this report is compiled from individual driver and police crash reports submitted to the Oregon Department of Transportation as required in ORS 811.720. The Crash Analysis and Reporting Unit is committed to providing the highest quality crash data to customers. However, because submittal of crash report forms is the responsibility of the individual driver, the Crash Analysis and Reporting Unit can not guarantee that all qualifying crashes are represented nor can assurances be made that all details pertaining to a single crash are accurate. Note: Legislative changes to DMV's vehicle crash reporting requirement, effective 01/01/2004, may result in fewer property damage only crashes being eligible for inclusion in the Statewide Crash Data File.

OREGON.. DEPARTMENT OF TRANSPORTATION - TRANSPORTATION DEVELOPMENT DIVISION
TRANSPORTATION DATA SECTION - CRASH ANAYLYSIS AND REPORTING UNIT
URBAN NON-SYSTEM CRASH LISTING

CITY OF HOOD RIVER, HOOD RIVER COUNTY

MAY ST at RAND RD, City of Hood River, Hood River County, 01/01/2013 to 12/31/2017

1 - 1 of 1 Crash records shown.

SER# / INVEST / RD DPT / UNLOC?	S P E D	A L C	D R U G S	M J I N V	S C H L	W O R K	DATE / DAY / TIME / LAT	CLASS / DIST / FROM / LONG	CITY STREET / FIRST STREET / SECOND STREET / LRS	RD CHAR / DIRECT / LOCTN	INT-TYPE / (MEDIAN) / LEGS / (#LANES)	INT-REL / TRAF- / CONTL	OFFRD / RNDBT / DRVWY	WTHR / SURF / LIGHT	CRASH / COLL / SVRTY	V#	SPCL USE / TRLR QTY / OWNER / TYPE	MOVE / FROM / TO	P#	PRTC / TYPE	INJ / SVRTY	A G E	S E X	LICNS / RES	PED / LOC	ERROR	ACT	EVENT	CAUSE
00127	N	N	N		N	N	05/12/2016	17	MAY ST	INTER	CROSS	N	N	CLR	ANGL-OTH	01	NONE 0	STRGHT											02
CITY							TH	0	RAND RD	CN		STOP SIGN	N	DRY	TURN		PRVTE	E -W									000		00
N							3P			01	0		N	DAY	INJ		PSNGR CAR		01	DRVR	INJC	80	F	OR-Y		000	000		00
N							45 42 13.7	-121 32 20.2																OR<25					
																02	NONE 0	TURN-L											
																	PRVTE	N -E									000		00
																	PSNGR CAR		01	DRVR	INJC	17	M	OR-Y		028	000		02
																								OR<25					

Disclaimer: The information contained in this report is compiled from individual driver and police crash reports submitted to the Oregon Department of Transportation as required in ORS 811.720. The Crash Analysis and Reporting Unit is committed to providing the highest quality crash data to customers. However, because submittal of crash report forms is the responsibility of the individual driver, the Crash Analysis and Reporting Unit can not guarantee that all qualifying crashes are represented nor can assurances be made that all details pertaining to a single crash are accurate. Note: Legislative changes to DMV's vehicle crash reporting requirement, effective 01/01/2004, may result in fewer property damage only crashes being eligible for inclusion in the Statewide Crash Data File.

Disclaimer: The information contained in this report is compiled from individual driver and police crash reports submitted to the Oregon Department of Transportation as required in ORS 811.720. The Crash Analysis and Reporting Unit is committed to providing the highest quality crash data to customers. However, because submittal of crash report forms is the responsibility of the individual driver, the Crash Analysis and Reporting Unit can not guarantee that all qualifying crashes are represented nor can assurances be made that all details pertaining to a single crash are accurate. Note: Legislative changes to DMV's vehicle crash reporting requirement, effective 01/01/2004, may result in fewer property damage only crashes being eligible for inclusion in the Statewide Crash Data File.

Left-Turn Lane Warrant Analysis

Project: 30th St Subdivision
Intersection: May Street at Frankton Road
Date: 5/12/2020
Scenario: 2022 Buildout Conditions - AM Peak Hour (SB)

2-lane roadway (English)

INPUT

Variable	Value
85th percentile speed, mph:	30
Percent of left-turns in advancing volume (V_A), %:	19%
Advancing volume (V_A), veh/h:	122
Opposing volume (V_O), veh/h:	219

OUTPUT

Variable	Value
Limiting advancing volume (V_A), veh/h:	384
Guidance for determining the need for a major-road left-turn bay:	
Left-turn treatment NOT warranted.	

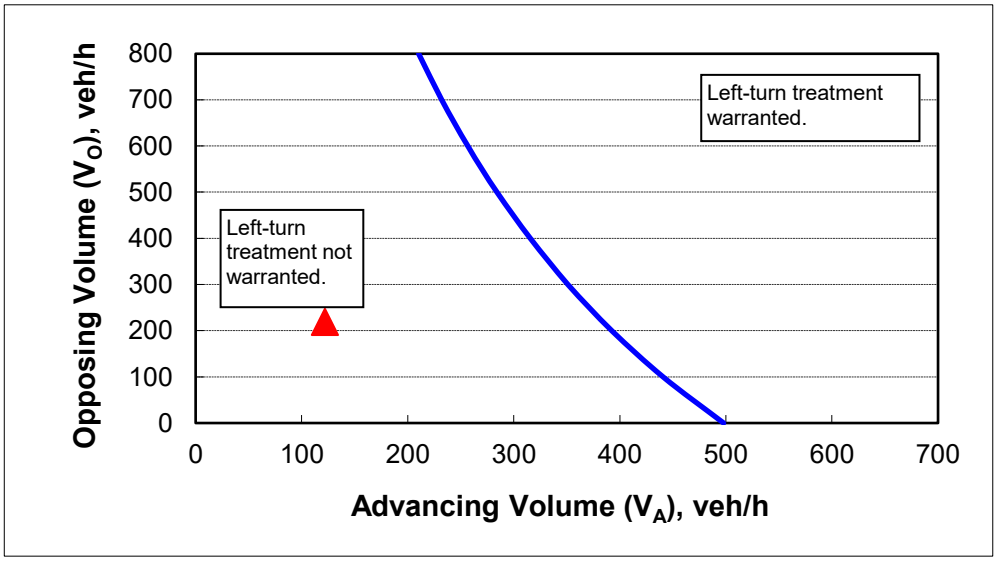

CALIBRATION CONSTANTS

Variable	Value
Average time for making left-turn, s:	3.0
Critical headway, s:	5.0
Average time for left-turn vehicle to clear the advancing lane, s:	1.9

Left-Turn Lane Warrant Analysis

Project: 30th St Subdivision
Intersection: May Street at Frankton Road
Date: 5/12/2020
Scenario: 2022 Buildout Conditions - PM Peak Hour (SB)

2-lane roadway (English)

INPUT

Variable	Value
85th percentile speed, mph:	30
Percent of left-turns in advancing volume (V_A), %:	22%
Advancing volume (V_A), veh/h:	138
Opposing volume (V_O), veh/h:	149

OUTPUT

Variable	Value
Limiting advancing volume (V_A), veh/h:	390
Guidance for determining the need for a major-road left-turn bay:	
Left-turn treatment NOT warranted.	

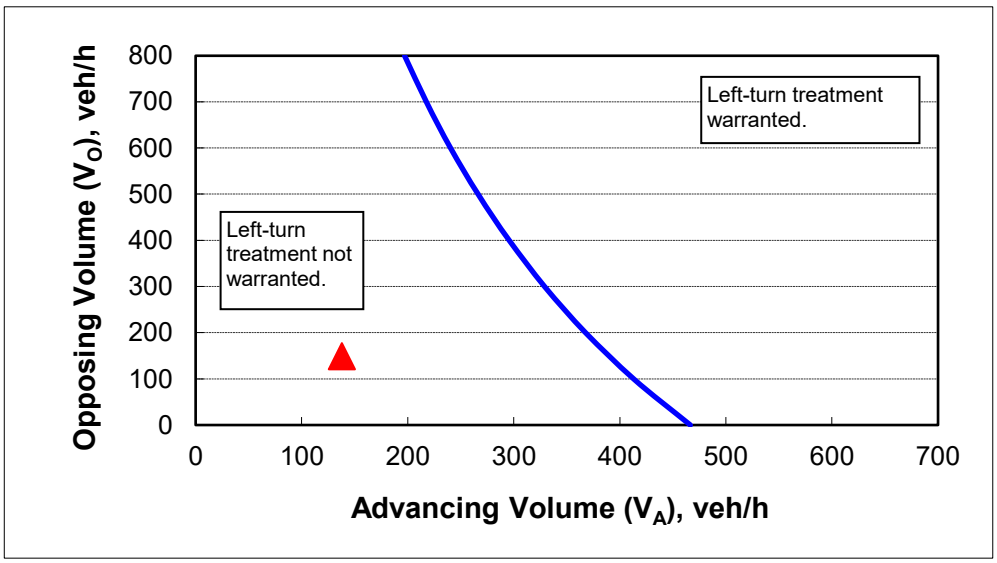

CALIBRATION CONSTANTS

Variable	Value
Average time for making left-turn, s:	3.0
Critical headway, s:	5.0
Average time for left-turn vehicle to clear the advancing lane, s:	1.9

Left-Turn Lane Warrant Analysis

Project: 30th St Subdivision
Intersection: May Street at 30th Street
Date: 5/12/2020
Scenario: 2022 Buildout Conditions - AM Peak Hour (EB)

2-lane roadway (English)

INPUT

Variable	Value
85th percentile speed, mph:	25
Percent of left-turns in advancing volume (V_A), %:	7%
Advancing volume (V_A), veh/h:	175
Opposing volume (V_O), veh/h:	89

OUTPUT

Variable	Value
Limiting advancing volume (V_A), veh/h:	725
Guidance for determining the need for a major-road left-turn bay:	
Left-turn treatment NOT warranted.	

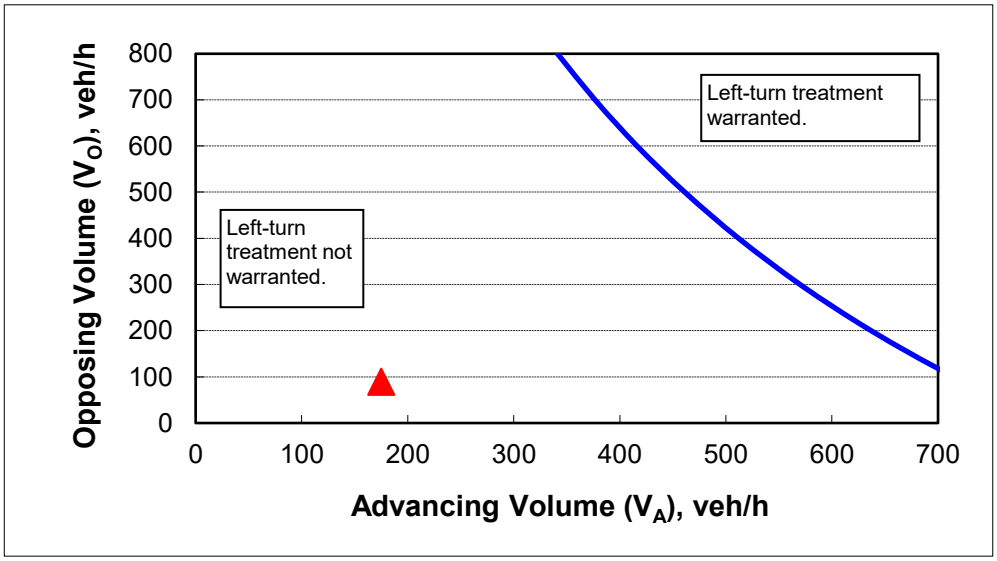

CALIBRATION CONSTANTS

Variable	Value
Average time for making left-turn, s:	3.0
Critical headway, s:	5.0
Average time for left-turn vehicle to clear the advancing lane, s:	1.9

Left-Turn Lane Warrant Analysis

Project: 30th St Subdivision
Intersection: May Street at 30th Street
Date: 5/12/2020
Scenario: 2022 Buildout Conditions - PM Peak Hour (EB)

2-lane roadway (English)

INPUT

Variable	Value
85th percentile speed, mph:	25
Percent of left-turns in advancing volume (V_A), %:	9%
Advancing volume (V_A), veh/h:	130
Opposing volume (V_O), veh/h:	171

OUTPUT

Variable	Value
Limiting advancing volume (V_A), veh/h:	575
Guidance for determining the need for a major-road left-turn bay:	
Left-turn treatment NOT warranted.	

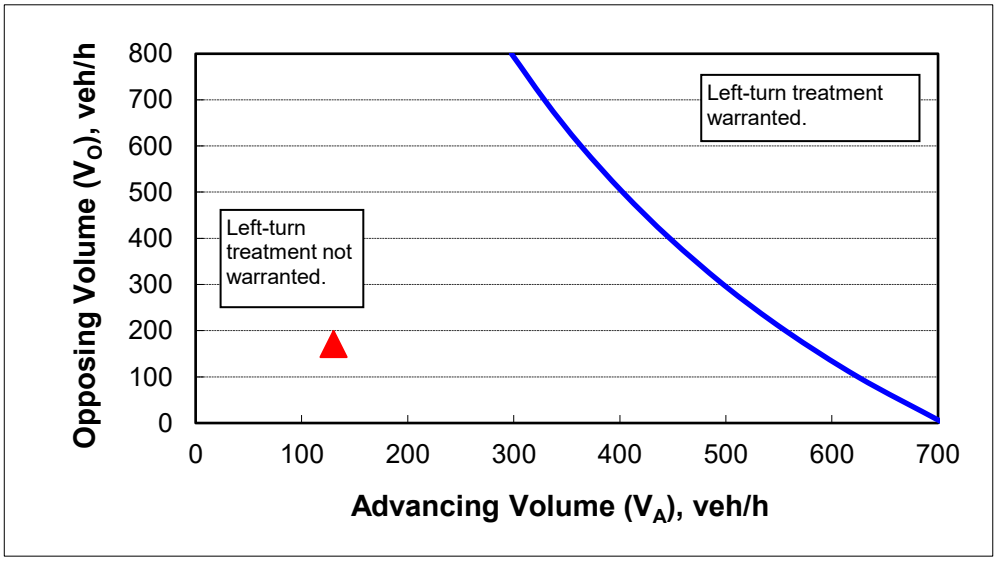

CALIBRATION CONSTANTS

Variable	Value
Average time for making left-turn, s:	3.0
Critical headway, s:	5.0
Average time for left-turn vehicle to clear the advancing lane, s:	1.9

Left-Turn Lane Warrant Analysis

Project: 30th St Subdivision
Intersection: May Street at Rand Road
Date: 5/12/2020
Scenario: 2022 Buildout Conditions - AM Peak Hour (EB)

2-lane roadway (English)

INPUT

Variable	Value
85th percentile speed, mph:	25
Percent of left-turns in advancing volume (V_A), %:	32%
Advancing volume (V_A), veh/h:	238
Opposing volume (V_O), veh/h:	155

OUTPUT

Variable	Value
Limiting advancing volume (V_A), veh/h:	362
Guidance for determining the need for a major-road left-turn bay:	
Left-turn treatment NOT warranted.	

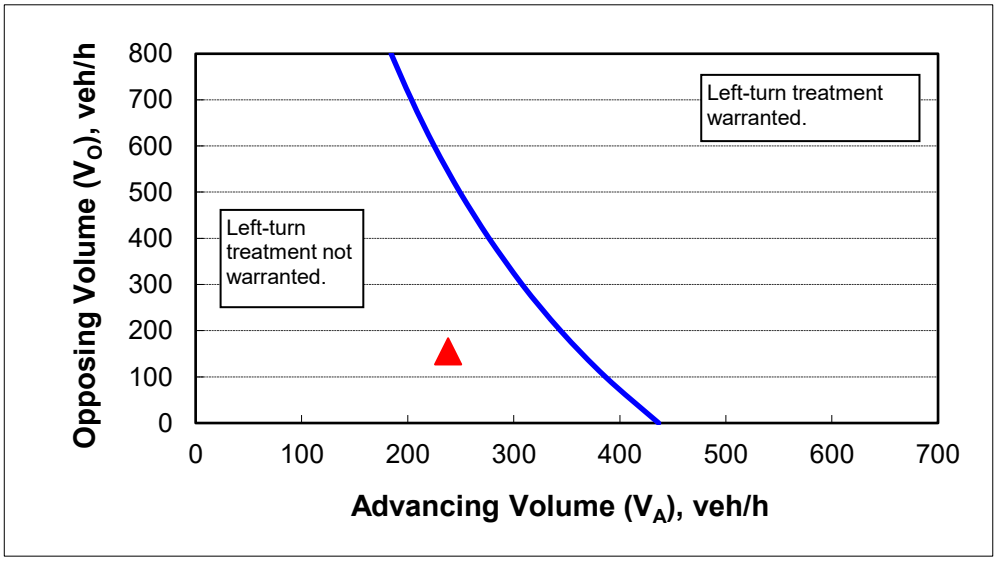

CALIBRATION CONSTANTS

Variable	Value
Average time for making left-turn, s:	3.0
Critical headway, s:	5.0
Average time for left-turn vehicle to clear the advancing lane, s:	1.9

Left-Turn Lane Warrant Analysis

Project: 30th St Subdivision
Intersection: May Street at Rand Road
Date: 5/12/2020
Scenario: 2022 Buildout Conditions - PM Peak Hour (EB)

2-lane roadway (English)

INPUT

Variable	Value
85th percentile speed, mph:	25
Percent of left-turns in advancing volume (V_A), %:	32%
Advancing volume (V_A), veh/h:	168
Opposing volume (V_O), veh/h:	246

OUTPUT

Variable	Value
Limiting advancing volume (V_A), veh/h:	329
Guidance for determining the need for a major-road left-turn bay:	
Left-turn treatment NOT warranted.	

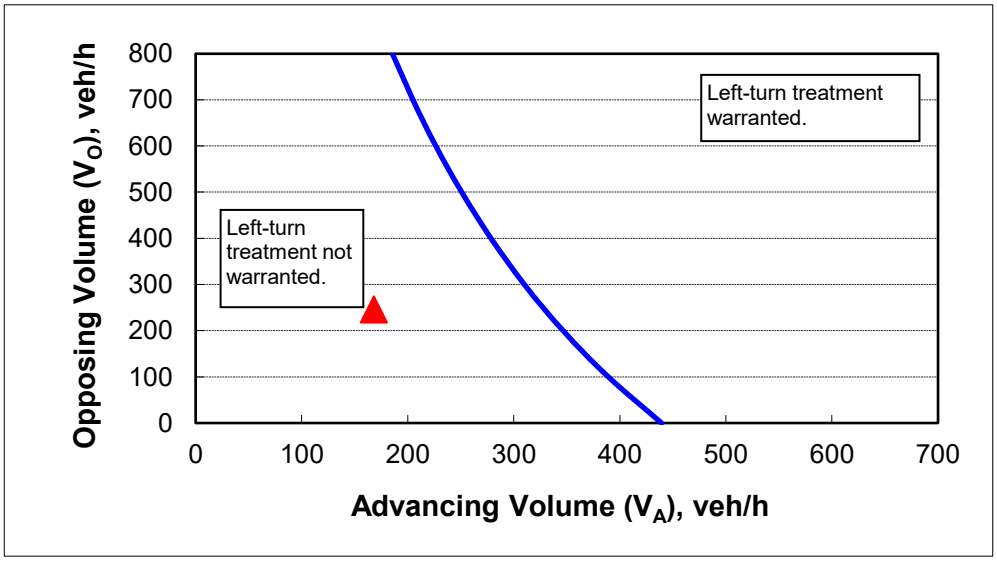

CALIBRATION CONSTANTS

Variable	Value
Average time for making left-turn, s:	3.0
Critical headway, s:	5.0
Average time for left-turn vehicle to clear the advancing lane, s:	1.9

Traffic Signal Warrant Analysis

Project: 30th St Subdivision
Date: 5/12/2020
Scenario: 2022 Buildout Conditions

Major Street:	Frankton Road	Minor Street:	May Street
Number of Lanes:	1	Number of Lanes:	1
PM Peak Hour Volumes:	287	PM Peak Hour Volumes:	113

Warrant Used:

	100 percent of standard warrants used
X	70 percent of standard warrants used due to 85th percentile speed in excess of 40 mph or isolated community with population less than 10,000.

Number of Lanes for Moving Traffic on Each Approach:		ADT on Major St. (total of both approaches)		ADT on Minor St. (higher-volume approach)	
WARRANT 1, CONDITION A		100%	70%	100%	70%
Major St.	Minor St.	Warrants	Warrants	Warrants	Warrants
1	1	8,850	6,200	2,650	1,850
2 or more	1	10,600	7,400	2,650	1,850
2 or more	2 or more	10,600	7,400	3,550	2,500
1	2 or more	8,850	6,200	3,550	2,500
WARRANT 1, CONDITION B					
1	1	13,300	9,300	1,350	950
2 or more	1	15,900	11,100	1,350	950
2 or more	2 or more	15,900	11,100	1,750	1,250
1	2 or more	13,300	9,300	1,750	1,250

Note: ADT volumes assume 8th highest hour is 5.6% of the daily volume

	Approach Volumes	Minimum Volumes	Is Signal Warrant Met?
Warrant 1			
Condition A: Minimum Vehicular Volume			
Major Street	2,870	6,200	
Minor Street*	1,130	1,850	**No**
Condition B: Interruption of Continuous Traffic			
Major Street	2,870	9,300	
Minor Street*	1,130	950	**No**
Combination Warrant			
Major Street	2,870	7,440	
Minor Street*	1,130	1,480	**No**

Note: Minor street right-turning traffic volumes reduced by 25%.

Traffic Signal Warrant Analysis

Project: 30th St Subdivision
Date: 5/12/2020
Scenario: 2022 Buildout Conditions

Major Street:	May Street	Minor Street:	30th Street
Number of Lanes:	1	Number of Lanes:	1
PM Peak Hour Volumes:	332	PM Peak Hour Volumes:	37

Warrant Used:

	100 percent of standard warrants used
X	70 percent of standard warrants used due to 85th percentile speed in excess of 40 mph or isolated community with population less than 10,000.

Number of Lanes for Moving Traffic on Each Approach:		ADT on Major St. (total of both approaches)		ADT on Minor St. (higher-volume approach)	
WARRANT 1, CONDITION A		100%	70%	100%	70%
Major St.	Minor St.	Warrants	Warrants	Warrants	Warrants
1	1	8,850	6,200	2,650	1,850
2 or more	1	10,600	7,400	2,650	1,850
2 or more	2 or more	10,600	7,400	3,550	2,500
1	2 or more	8,850	6,200	3,550	2,500
WARRANT 1, CONDITION B					
1	1	13,300	9,300	1,350	950
2 or more	1	15,900	11,100	1,350	950
2 or more	2 or more	15,900	11,100	1,750	1,250
1	2 or more	13,300	9,300	1,750	1,250

Note: ADT volumes assume 8th highest hour is 5.6% of the daily volume

	Approach Volumes	Minimum Volumes	Is Signal Warrant Met?
Warrant 1			
Condition A: Minimum Vehicular Volume			
Major Street	3,320	6,200	
Minor Street*	370	1,850	**No**
Condition B: Interruption of Continuous Traffic			
Major Street	3,320	9,300	
Minor Street*	370	950	**No**
Combination Warrant			
Major Street	3,320	7,440	
Minor Street*	370	1,480	**No**

Note: Minor street right-turning traffic volumes reduced by 25%.

Traffic Signal Warrant Analysis

Project: 30th St Subdivision
Date: 5/12/2020
Scenario: 2022 Buildout Conditions

Major Street:	May Street	Minor Street:	Rand Road
Number of Lanes:	1	Number of Lanes:	1
PM Peak Hour Volumes:	423	PM Peak Hour Volumes:	194

Warrant Used:

	100 percent of standard warrants used
X	70 percent of standard warrants used due to 85th percentile speed in excess of 40 mph or isolated community with population less than 10,000.

Number of Lanes for Moving Traffic on Each Approach:		ADT on Major St. (total of both approaches)		ADT on Minor St. (higher-volume approach)	
WARRANT 1, CONDITION A		100%	70%	100%	70%
Major St.	Minor St.	Warrants	Warrants	Warrants	Warrants
1	1	8,850	6,200	2,650	1,850
2 or more	1	10,600	7,400	2,650	1,850
2 or more	2 or more	10,600	7,400	3,550	2,500
1	2 or more	8,850	6,200	3,550	2,500
WARRANT 1, CONDITION B					
1	1	13,300	9,300	1,350	950
2 or more	1	15,900	11,100	1,350	950
2 or more	2 or more	15,900	11,100	1,750	1,250
1	2 or more	13,300	9,300	1,750	1,250

Note: ADT volumes assume 8th highest hour is 5.6% of the daily volume

	Approach Volumes	Minimum Volumes	Is Signal Warrant Met?
Warrant 1			
Condition A: Minimum Vehicular Volume			
Major Street	4,230	6,200	
Minor Street*	1,940	1,850	**No**
Condition B: Interruption of Continuous Traffic			
Major Street	4,230	9,300	
Minor Street*	1,940	950	**No**
Combination Warrant			
Major Street	4,230	7,440	
Minor Street*	1,940	1,480	**No**

Note: Minor street right-turning traffic volumes reduced by 25%.

Intersection	
Int Delay, s/veh	3.2

Movement	WBL	WBR	NBT	NBR	SBL	SBT
Lane Configurations						
Traffic Vol, veh/h	92	14	107	103	21	95
Future Vol, veh/h	92	14	107	103	21	95
Conflicting Peds, #/hr	0	0	0	0	0	0
Sign Control	Stop	Stop	Free	Free	Free	Free
RT Channelized	-	None	-	None	-	None
Storage Length	0	-	-	-	-	-
Veh in Median Storage, #	0	-	0	-	-	0
Grade, %	0	-	0	-	-	0
Peak Hour Factor	89	89	89	89	89	89
Heavy Vehicles, %	3	3	2	2	4	4
Mvmt Flow	103	16	120	116	24	107

Major/Minor	Minor1		Major1		Major2	
Conflicting Flow All	333	178	0	0	236	0
Stage 1	178	-	-	-	-	-
Stage 2	155	-	-	-	-	-
Critical Hdwy	6.43	6.23	-	-	4.14	-
Critical Hdwy Stg 1	5.43	-	-	-	-	-
Critical Hdwy Stg 2	5.43	-	-	-	-	-
Follow-up Hdwy	3.527	3.327	-	-	2.236	-
Pot Cap-1 Maneuver	660	862	-	-	1319	-
Stage 1	850	-	-	-	-	-
Stage 2	871	-	-	-	-	-
Platoon blocked, %			-	-		-
Mov Cap-1 Maneuver	647	862	-	-	1319	-
Mov Cap-2 Maneuver	647	-	-	-	-	-
Stage 1	834	-	-	-	-	-
Stage 2	871	-	-	-	-	-

Approach	WB	NB	SB
HCM Control Delay, s	11.5	0	1.4
HCM LOS	B		

Minor Lane/Major Mvmt	NBT	NBR	WBLn1	SBL	SBT
Capacity (veh/h)	-	-	669	1319	-
HCM Lane V/C Ratio	-	-	0.178	0.018	-
HCM Control Delay (s)	-	-	11.5	7.8	0
HCM Lane LOS	-	-	B	A	A
HCM 95th %tile Q(veh)	-	-	0.6	0.1	-

Intersection	
Int Delay, s/veh	2.5

Movement	EBL	EBT	EBR	WBL	WBT	WBR	NBL	NBT	NBR	SBL	SBT	SBR
Lane Configurations												
Traffic Vol, veh/h	12	131	9	8	69	8	9	1	15	17	0	18
Future Vol, veh/h	12	131	9	8	69	8	9	1	15	17	0	18
Conflicting Peds, #/hr	2	0	3	3	0	2	2	0	2	2	0	2
Sign Control	Free	Free	Free	Free	Free	Free	Stop	Stop	Stop	Stop	Stop	Stop
RT Channelized	-	-	None	-	-	None	-	-	None	-	-	None
Storage Length	-	-	-	-	-	-	-	-	-	-	-	-
Veh in Median Storage, #	-	0	-	-	0	-	-	0	-	-	0	-
Grade, %	-	0	-	-	0	-	-	0	-	-	0	-
Peak Hour Factor	84	84	84	84	84	84	84	84	84	84	84	84
Heavy Vehicles, %	1	1	1	4	4	4	4	4	4	0	0	0
Mvmt Flow	14	156	11	10	82	10	11	1	18	20	0	21

Major/Minor	Major1			Major2			Minor1			Minor2		
Conflicting Flow All	94	0	0	170	0	0	313	307	167	310	307	91
Stage 1	-	-	-	-	-	-	193	193	-	109	109	-
Stage 2	-	-	-	-	-	-	120	114	-	201	198	-
Critical Hdwy	4.11	-	-	4.14	-	-	7.14	6.54	6.24	7.1	6.5	6.2
Critical Hdwy Stg 1	-	-	-	-	-	-	6.14	5.54	-	6.1	5.5	-
Critical Hdwy Stg 2	-	-	-	-	-	-	6.14	5.54	-	6.1	5.5	-
Follow-up Hdwy	2.209	-	-	2.236	-	-	3.536	4.036	3.336	3.5	4	3.3
Pot Cap-1 Maneuver	1506	-	-	1395	-	-	636	604	872	646	610	972
Stage 1	-	-	-	-	-	-	804	737	-	901	809	-
Stage 2	-	-	-	-	-	-	880	797	-	805	741	-
Platoon blocked, %		-	-		-	-						
Mov Cap-1 Maneuver	1503	-	-	1391	-	-	611	590	868	621	596	968
Mov Cap-2 Maneuver	-	-	-	-	-	-	611	590	-	621	596	-
Stage 1	-	-	-	-	-	-	794	727	-	890	801	-
Stage 2	-	-	-	-	-	-	852	789	-	778	731	-

Approach	EB	WB	NB	SB
HCM Control Delay, s	0.6	0.7	10.1	10
HCM LOS			B	B

Minor Lane/Major Mvmt	NBLn1	EBL	EBT	EBR	WBL	WBT	WBR	SBLn1
Capacity (veh/h)	742	1503	-	-	1391	-	-	761
HCM Lane V/C Ratio	0.04	0.01	-	-	0.007	-	-	0.055
HCM Control Delay (s)	10.1	7.4	0	-	7.6	0	-	10
HCM Lane LOS	B	A	A	-	A	A	-	B
HCM 95th %tile Q(veh)	0.1	0	-	-	0	-	-	0.2

Intersection	
Int Delay, s/veh	4

Movement	EBL	EBT	EBR	WBL	WBT	WBR	NBL	NBT	NBR	SBL	SBT	SBR
Lane Configurations												
Traffic Vol, veh/h	49	144	0	2	70	75	1	0	4	76	0	28
Future Vol, veh/h	49	144	0	2	70	75	1	0	4	76	0	28
Conflicting Peds, #/hr	6	0	4	4	0	6	1	0	3	3	0	1
Sign Control	Free	Free	Free	Free	Free	Free	Stop	Stop	Stop	Stop	Stop	Stop
RT Channelized	-	-	None	-	-	None	-	-	None	-	-	None
Storage Length	-	-	-	-	-	-	-	-	-	-	-	-
Veh in Median Storage, #	-	0	-	-	0	-	-	0	-	-	0	-
Grade, %	-	0	-	-	0	-	-	0	-	-	0	-
Peak Hour Factor	83	83	83	83	83	83	83	83	83	83	83	83
Heavy Vehicles, %	1	1	1	3	3	3	0	0	0	4	4	4
Mvmt Flow	59	173	0	2	84	90	1	0	5	92	0	34

Major/Minor	Major1			Major2			Minor1			Minor2		
Conflicting Flow All	180	0	0	177	0	0	446	479	180	436	434	136
Stage 1	-	-	-	-	-	-	295	295	-	139	139	-
Stage 2	-	-	-	-	-	-	151	184	-	297	295	-
Critical Hdwy	4.11	-	-	4.13	-	-	7.1	6.5	6.2	7.14	6.54	6.24
Critical Hdwy Stg 1	-	-	-	-	-	-	6.1	5.5	-	6.14	5.54	-
Critical Hdwy Stg 2	-	-	-	-	-	-	6.1	5.5	-	6.14	5.54	-
Follow-up Hdwy	2.209	-	-	2.227	-	-	3.5	4	3.3	3.536	4.036	3.336
Pot Cap-1 Maneuver	1402	-	-	1393	-	-	526	489	868	527	512	907
Stage 1	-	-	-	-	-	-	718	673	-	859	778	-
Stage 2	-	-	-	-	-	-	856	751	-	707	665	-
Platoon blocked, %		-	-		-	-						
Mov Cap-1 Maneuver	1394	-	-	1388	-	-	485	461	862	500	482	901
Mov Cap-2 Maneuver	-	-	-	-	-	-	485	461	-	500	482	-
Stage 1	-	-	-	-	-	-	681	639	-	814	772	-
Stage 2	-	-	-	-	-	-	822	745	-	668	631	-

Approach	EB	WB	NB	SB
HCM Control Delay, s	2	0.1	9.9	13.1
HCM LOS			A	B

Minor Lane/Major Mvmt	NBLn1	EBL	EBT	EBR	WBL	WBT	WBR	SBLn1
Capacity (veh/h)	746	1394	-	-	1388	-	-	568
HCM Lane V/C Ratio	0.008	0.042	-	-	0.002	-	-	0.221
HCM Control Delay (s)	9.9	7.7	0	-	7.6	0	-	13.1
HCM Lane LOS	A	A	A	-	A	A	-	B
HCM 95th %tile Q(veh)	0	0.1	-	-	0	-	-	0.8

Intersection	
Int Delay, s/veh	3.8

Movement	WBL	WBR	NBT	NBR	SBL	SBT
Lane Configurations						
Traffic Vol, veh/h	81	33	64	75	26	103
Future Vol, veh/h	81	33	64	75	26	103
Conflicting Peds, #/hr	1	2	0	1	1	0
Sign Control	Stop	Stop	Free	Free	Free	Free
RT Channelized	-	None	-	None	-	None
Storage Length	0	-	-	-	-	-
Veh in Median Storage, #	0	-	0	-	-	0
Grade, %	0	-	0	-	-	0
Peak Hour Factor	86	86	86	86	86	86
Heavy Vehicles, %	1	1	1	1	2	2
Mvmt Flow	94	38	74	87	30	120

Major/Minor	Minor1		Major1		Major2	
Conflicting Flow All	300	121	0	0	162	0
Stage 1	119	-	-	-	-	-
Stage 2	181	-	-	-	-	-
Critical Hdwy	6.41	6.21	-	-	4.12	-
Critical Hdwy Stg 1	5.41	-	-	-	-	-
Critical Hdwy Stg 2	5.41	-	-	-	-	-
Follow-up Hdwy	3.509	3.309	-	-	2.218	-
Pot Cap-1 Maneuver	694	933	-	-	1417	-
Stage 1	909	-	-	-	-	-
Stage 2	853	-	-	-	-	-
Platoon blocked, %			-	-		-
Mov Cap-1 Maneuver	677	930	-	-	1416	-
Mov Cap-2 Maneuver	677	-	-	-	-	-
Stage 1	887	-	-	-	-	-
Stage 2	852	-	-	-	-	-

Approach	WB	NB	SB
HCM Control Delay, s	11	0	1.5
HCM LOS	B		

Minor Lane/Major Mvmt	NBT	NBR	WBLn1	SBL	SBT
Capacity (veh/h)	-	-	735	1416	-
HCM Lane V/C Ratio	-	-	0.18	0.021	-
HCM Control Delay (s)	-	-	11	7.6	0
HCM Lane LOS	-	-	B	A	A
HCM 95th %tile Q(veh)	-	-	0.7	0.1	-

Intersection	
Int Delay, s/veh	2.3

Movement	EBL	EBT	EBR	WBL	WBT	WBR	NBL	NBT	NBR	SBL	SBT	SBR
Lane Configurations												
Traffic Vol, veh/h	10	93	5	22	117	18	3	2	8	20	3	8
Future Vol, veh/h	10	93	5	22	117	18	3	2	8	20	3	8
Conflicting Peds, #/hr	4	0	10	10	0	4	0	0	1	1	0	0
Sign Control	Free	Free	Free	Free	Free	Free	Stop	Stop	Stop	Stop	Stop	Stop
RT Channelized	-	-	None	-	-	None	-	-	None	-	-	None
Storage Length	-	-	-	-	-	-	-	-	-	-	-	-
Veh in Median Storage, #	-	0	-	-	0	-	-	0	-	-	0	-
Grade, %	-	0	-	-	0	-	-	0	-	-	0	-
Peak Hour Factor	87	87	87	87	87	87	87	87	87	87	87	87
Heavy Vehicles, %	0	0	0	0	0	0	0	0	0	0	0	0
Mvmt Flow	11	107	6	25	134	21	3	2	9	23	3	9

Major/Minor	Major1			Major2			Minor1			Minor2		
Conflicting Flow All	159	0	0	123	0	0	343	351	121	338	344	149
Stage 1	-	-	-	-	-	-	142	142	-	199	199	-
Stage 2	-	-	-	-	-	-	201	209	-	139	145	-
Critical Hdwy	4.1	-	-	4.1	-	-	7.1	6.5	6.2	7.1	6.5	6.2
Critical Hdwy Stg 1	-	-	-	-	-	-	6.1	5.5	-	6.1	5.5	-
Critical Hdwy Stg 2	-	-	-	-	-	-	6.1	5.5	-	6.1	5.5	-
Follow-up Hdwy	2.2	-	-	2.2	-	-	3.5	4	3.3	3.5	4	3.3
Pot Cap-1 Maneuver	1433	-	-	1477	-	-	615	577	936	620	582	903
Stage 1	-	-	-	-	-	-	866	783	-	807	740	-
Stage 2	-	-	-	-	-	-	805	733	-	869	781	-
Platoon blocked, %		-	-		-	-						
Mov Cap-1 Maneuver	1428	-	-	1463	-	-	588	554	926	596	559	900
Mov Cap-2 Maneuver	-	-	-	-	-	-	588	554	-	596	559	-
Stage 1	-	-	-	-	-	-	851	769	-	797	723	-
Stage 2	-	-	-	-	-	-	778	716	-	850	767	-

Approach	EB	WB	NB	SB
HCM Control Delay, s	0.7	1.1	9.9	10.9
HCM LOS			A	B

Minor Lane/Major Mvmt	NBLn1	EBL	EBT	EBR	WBL	WBT	WBR	SBLn1
Capacity (veh/h)	749	1428	-	-	1463	-	-	648
HCM Lane V/C Ratio	0.02	0.008	-	-	0.017	-	-	0.055
HCM Control Delay (s)	9.9	7.5	0	-	7.5	0	-	10.9
HCM Lane LOS	A	A	A	-	A	A	-	B
HCM 95th %tile Q(veh)	0.1	0	-	-	0.1	-	-	0.2

Intersection	
Int Delay, s/veh	5.5

Movement	EBL	EBT	EBR	WBL	WBT	WBR	NBL	NBT	NBR	SBL	SBT	SBR
Lane Configurations												
Traffic Vol, veh/h	33	102	2	9	119	106	2	1	4	111	5	65
Future Vol, veh/h	33	102	2	9	119	106	2	1	4	111	5	65
Conflicting Peds, #/hr	8	0	11	11	0	8	2	0	3	3	0	2
Sign Control	Free	Free	Free	Free	Free	Free	Stop	Stop	Stop	Stop	Stop	Stop
RT Channelized	-	-	None	-	-	None	-	-	None	-	-	None
Storage Length	-	-	-	-	-	-	-	-	-	-	-	-
Veh in Median Storage, #	-	0	-	-	0	-	-	0	-	-	0	-
Grade, %	-	0	-	-	0	-	-	0	-	-	0	-
Peak Hour Factor	84	84	84	84	84	84	84	84	84	84	84	84
Heavy Vehicles, %	0	0	0	0	0	0	0	0	0	1	1	1
Mvmt Flow	39	121	2	11	142	126	2	1	5	132	6	77

Major/Minor	Major1			Major2			Minor1			Minor2		
Conflicting Flow All	276	0	0	134	0	0	482	509	136	441	447	215
Stage 1	-	-	-	-	-	-	211	211	-	235	235	-
Stage 2	-	-	-	-	-	-	271	298	-	206	212	-
Critical Hdwy	4.1	-	-	4.1	-	-	7.1	6.5	6.2	7.11	6.51	6.21
Critical Hdwy Stg 1	-	-	-	-	-	-	6.1	5.5	-	6.11	5.51	-
Critical Hdwy Stg 2	-	-	-	-	-	-	6.1	5.5	-	6.11	5.51	-
Follow-up Hdwy	2.2	-	-	2.2	-	-	3.5	4	3.3	3.509	4.009	3.309
Pot Cap-1 Maneuver	1299	-	-	1463	-	-	498	470	918	528	508	827
Stage 1	-	-	-	-	-	-	796	731	-	770	712	-
Stage 2	-	-	-	-	-	-	739	671	-	798	729	-
Platoon blocked, %		-	-		-	-						
Mov Cap-1 Maneuver	1289	-	-	1448	-	-	427	442	906	502	478	819
Mov Cap-2 Maneuver	-	-	-	-	-	-	427	442	-	502	478	-
Stage 1	-	-	-	-	-	-	762	700	-	739	700	-
Stage 2	-	-	-	-	-	-	656	660	-	764	698	-

Approach	EB	WB	NB	SB
HCM Control Delay, s	1.9	0.3	10.9	14.8
HCM LOS			B	B

Minor Lane/Major Mvmt	NBLn1	EBL	EBT	EBR	WBL	WBT	WBR	SBLn1
Capacity (veh/h)	616	1289	-	-	1448	-	-	582
HCM Lane V/C Ratio	0.014	0.03	-	-	0.007	-	-	0.37
HCM Control Delay (s)	10.9	7.9	0	-	7.5	0	-	14.8
HCM Lane LOS	B	A	A	-	A	A	-	B
HCM 95th %tile Q(veh)	0	0.1	-	-	0	-	-	1.7

Intersection	
Int Delay, s/veh	3.4

Movement	WBL	WBR	NBT	NBR	SBL	SBT
Lane Configurations						
Traffic Vol, veh/h	99	17	111	108	23	99
Future Vol, veh/h	99	17	111	108	23	99
Conflicting Peds, #/hr	0	0	0	0	0	0
Sign Control	Stop	Stop	Free	Free	Free	Free
RT Channelized	-	None	-	None	-	None
Storage Length	0	-	-	-	-	-
Veh in Median Storage, #	0	-	0	-	-	0
Grade, %	0	-	0	-	-	0
Peak Hour Factor	89	89	89	89	89	89
Heavy Vehicles, %	3	3	2	2	4	4
Mvmt Flow	111	19	125	121	26	111

Major/Minor	Minor1		Major1		Major2	
Conflicting Flow All	349	186	0	0	246	0
Stage 1	186	-	-	-	-	-
Stage 2	163	-	-	-	-	-
Critical Hdwy	6.43	6.23	-	-	4.14	-
Critical Hdwy Stg 1	5.43	-	-	-	-	-
Critical Hdwy Stg 2	5.43	-	-	-	-	-
Follow-up Hdwy	3.527	3.327	-	-	2.236	-
Pot Cap-1 Maneuver	646	854	-	-	1308	-
Stage 1	843	-	-	-	-	-
Stage 2	864	-	-	-	-	-
Platoon blocked, %			-	-		-
Mov Cap-1 Maneuver	632	854	-	-	1308	-
Mov Cap-2 Maneuver	632	-	-	-	-	-
Stage 1	825	-	-	-	-	-
Stage 2	864	-	-	-	-	-

Approach	WB	NB	SB
HCM Control Delay, s	11.8	0	1.5
HCM LOS	B		

Minor Lane/Major Mvmt	NBT	NBR	WBLn1	SBL	SBT
Capacity (veh/h)	-	-	657	1308	-
HCM Lane V/C Ratio	-	-	0.198	0.02	-
HCM Control Delay (s)	-	-	11.8	7.8	0
HCM Lane LOS	-	-	B	A	A
HCM 95th %tile Q(veh)	-	-	0.7	0.1	-

Intersection	
Int Delay, s/veh	2.6

Movement	EBL	EBT	EBR	WBL	WBT	WBR	NBL	NBT	NBR	SBL	SBT	SBR
Lane Configurations												
Traffic Vol, veh/h	12	153	10	10	78	8	11	1	23	18	0	19
Future Vol, veh/h	12	153	10	10	78	8	11	1	23	18	0	19
Conflicting Peds, #/hr	2	0	3	3	0	2	2	0	2	2	0	2
Sign Control	Free	Free	Free	Free	Free	Free	Stop	Stop	Stop	Stop	Stop	Stop
RT Channelized	-	-	None	-	-	None	-	-	None	-	-	None
Storage Length	-	-	-	-	-	-	-	-	-	-	-	-
Veh in Median Storage, #	-	0	-	-	0	-	-	0	-	-	0	-
Grade, %	-	0	-	-	0	-	-	0	-	-	0	-
Peak Hour Factor	84	84	84	84	84	84	84	84	84	84	84	84
Heavy Vehicles, %	1	1	1	4	4	4	4	4	4	0	0	0
Mvmt Flow	14	182	12	12	93	10	13	1	27	21	0	23

Major/Minor	Major1			Major2			Minor1			Minor2		
Conflicting Flow All	105	0	0	197	0	0	355	348	193	356	349	102
Stage 1	-	-	-	-	-	-	219	219	-	124	124	-
Stage 2	-	-	-	-	-	-	136	129	-	232	225	-
Critical Hdwy	4.11	-	-	4.14	-	-	7.14	6.54	6.24	7.1	6.5	6.2
Critical Hdwy Stg 1	-	-	-	-	-	-	6.14	5.54	-	6.1	5.5	-
Critical Hdwy Stg 2	-	-	-	-	-	-	6.14	5.54	-	6.1	5.5	-
Follow-up Hdwy	2.209	-	-	2.236	-	-	3.536	4.036	3.336	3.5	4	3.3
Pot Cap-1 Maneuver	1493	-	-	1364	-	-	596	572	843	603	578	959
Stage 1	-	-	-	-	-	-	779	718	-	885	797	-
Stage 2	-	-	-	-	-	-	862	786	-	775	721	-
Platoon blocked, %		-	-		-	-						
Mov Cap-1 Maneuver	1490	-	-	1360	-	-	570	558	839	572	564	955
Mov Cap-2 Maneuver	-	-	-	-	-	-	570	558	-	572	564	-
Stage 1	-	-	-	-	-	-	768	708	-	873	788	-
Stage 2	-	-	-	-	-	-	832	777	-	739	711	-

Approach	EB	WB	NB	SB
HCM Control Delay, s	0.5	0.8	10.3	10.3
HCM LOS			B	B

Minor Lane/Major Mvmt	NBLn1	EBL	EBT	EBR	WBL	WBT	WBR	SBLn1
Capacity (veh/h)	722	1490	-	-	1360	-	-	720
HCM Lane V/C Ratio	0.058	0.01	-	-	0.009	-	-	0.061
HCM Control Delay (s)	10.3	7.4	0	-	7.7	0	-	10.3
HCM Lane LOS	B	A	A	-	A	A	-	B
HCM 95th %tile Q(veh)	0.2	0	-	-	0	-	-	0.2

Intersection	
Int Delay, s/veh	4.5

Movement	EBL	EBT	EBR	WBL	WBT	WBR	NBL	NBT	NBR	SBL	SBT	SBR
Lane Configurations												
Traffic Vol, veh/h	71	158	0	2	76	78	1	0	4	79	0	36
Future Vol, veh/h	71	158	0	2	76	78	1	0	4	79	0	36
Conflicting Peds, #/hr	6	0	4	4	0	6	1	0	3	3	0	1
Sign Control	Free	Free	Free	Free	Free	Free	Stop	Stop	Stop	Stop	Stop	Stop
RT Channelized	-	-	None	-	-	None	-	-	None	-	-	None
Storage Length	-	-	-	-	-	-	-	-	-	-	-	-
Veh in Median Storage, #	-	0	-	-	0	-	-	0	-	-	0	-
Grade, %	-	0	-	-	0	-	-	0	-	-	0	-
Peak Hour Factor	83	83	83	83	83	83	83	83	83	83	83	83
Heavy Vehicles, %	1	1	1	3	3	3	0	0	0	4	4	4
Mvmt Flow	86	190	0	2	92	94	1	0	5	95	0	43

Major/Minor	Major1			Major2			Minor1			Minor2		
Conflicting Flow All	192	0	0	194	0	0	532	562	197	517	515	146
Stage 1	-	-	-	-	-	-	366	366	-	149	149	-
Stage 2	-	-	-	-	-	-	166	196	-	368	366	-
Critical Hdwy	4.11	-	-	4.13	-	-	7.1	6.5	6.2	7.14	6.54	6.24
Critical Hdwy Stg 1	-	-	-	-	-	-	6.1	5.5	-	6.14	5.54	-
Critical Hdwy Stg 2	-	-	-	-	-	-	6.1	5.5	-	6.14	5.54	-
Follow-up Hdwy	2.209	-	-	2.227	-	-	3.5	4	3.3	3.536	4.036	3.336
Pot Cap-1 Maneuver	1388	-	-	1373	-	-	461	439	849	466	461	896
Stage 1	-	-	-	-	-	-	657	626	-	849	770	-
Stage 2	-	-	-	-	-	-	841	742	-	648	619	-
Platoon blocked, %		-	-		-	-						
Mov Cap-1 Maneuver	1380	-	-	1368	-	-	413	403	843	434	424	890
Mov Cap-2 Maneuver	-	-	-	-	-	-	413	403	-	434	424	-
Stage 1	-	-	-	-	-	-	608	580	-	785	764	-
Stage 2	-	-	-	-	-	-	798	736	-	597	573	-

Approach	EB	WB	NB	SB
HCM Control Delay, s	2.4	0.1	10.2	14.5
HCM LOS			B	B

Minor Lane/Major Mvmt	NBLn1	EBL	EBT	EBR	WBL	WBT	WBR	SBLn1
Capacity (veh/h)	698	1380	-	-	1368	-	-	517
HCM Lane V/C Ratio	0.009	0.062	-	-	0.002	-	-	0.268
HCM Control Delay (s)	10.2	7.8	0	-	7.6	0	-	14.5
HCM Lane LOS	B	A	A	-	A	A	-	B
HCM 95th %tile Q(veh)	0	0.2	-	-	0	-	-	1.1

Intersection	
Int Delay, s/veh	3.9

Movement	WBL	WBR	NBT	NBR	SBL	SBT
Lane Configurations						
Traffic Vol, veh/h	86	35	67	81	30	107
Future Vol, veh/h	86	35	67	81	30	107
Conflicting Peds, #/hr	1	2	0	1	1	0
Sign Control	Stop	Stop	Free	Free	Free	Free
RT Channelized	-	None	-	None	-	None
Storage Length	0	-	-	-	-	-
Veh in Median Storage, #	0	-	0	-	-	0
Grade, %	0	-	0	-	-	0
Peak Hour Factor	86	86	86	86	86	86
Heavy Vehicles, %	1	1	1	1	2	2
Mvmt Flow	100	41	78	94	35	124

Major/Minor	Minor1		Major1		Major2	
Conflicting Flow All	321	128	0	0	173	0
Stage 1	126	-	-	-	-	-
Stage 2	195	-	-	-	-	-
Critical Hdwy	6.41	6.21	-	-	4.12	-
Critical Hdwy Stg 1	5.41	-	-	-	-	-
Critical Hdwy Stg 2	5.41	-	-	-	-	-
Follow-up Hdwy	3.509	3.309	-	-	2.218	-
Pot Cap-1 Maneuver	675	925	-	-	1404	-
Stage 1	902	-	-	-	-	-
Stage 2	840	-	-	-	-	-
Platoon blocked, %			-	-		-
Mov Cap-1 Maneuver	655	922	-	-	1403	-
Mov Cap-2 Maneuver	655	-	-	-	-	-
Stage 1	877	-	-	-	-	-
Stage 2	839	-	-	-	-	-

Approach	WB	NB	SB
HCM Control Delay, s	11.3	0	1.7
HCM LOS	B		

Minor Lane/Major Mvmt	NBT	NBR	WBLn1	SBL	SBT
Capacity (veh/h)	-	-	715	1403	-
HCM Lane V/C Ratio	-	-	0.197	0.025	-
HCM Control Delay (s)	-	-	11.3	7.6	0
HCM Lane LOS	-	-	B	A	A
HCM 95th %tile Q(veh)	-	-	0.7	0.1	-

Intersection	
Int Delay, s/veh	2.3

Movement	EBL	EBT	EBR	WBL	WBT	WBR	NBL	NBT	NBR	SBL	SBT	SBR
Lane Configurations												
Traffic Vol, veh/h	10	110	8	31	142	19	4	2	13	21	3	8
Future Vol, veh/h	10	110	8	31	142	19	4	2	13	21	3	8
Conflicting Peds, #/hr	4	0	10	10	0	4	0	0	1	1	0	0
Sign Control	Free	Free	Free	Free	Free	Free	Stop	Stop	Stop	Stop	Stop	Stop
RT Channelized	-	-	None	-	-	None	-	-	None	-	-	None
Storage Length	-	-	-	-	-	-	-	-	-	-	-	-
Veh in Median Storage, #	-	0	-	-	0	-	-	0	-	-	0	-
Grade, %	-	0	-	-	0	-	-	0	-	-	0	-
Peak Hour Factor	87	87	87	87	87	87	87	87	87	87	87	87
Heavy Vehicles, %	0	0	0	0	0	0	0	0	0	0	0	0
Mvmt Flow	11	126	9	36	163	22	5	2	15	24	3	9

Major/Minor	Major1			Major2			Minor1			Minor2		
Conflicting Flow All	189	0	0	145	0	0	415	424	142	412	417	178
Stage 1	-	-	-	-	-	-	163	163	-	250	250	-
Stage 2	-	-	-	-	-	-	252	261	-	162	167	-
Critical Hdwy	4.1	-	-	4.1	-	-	7.1	6.5	6.2	7.1	6.5	6.2
Critical Hdwy Stg 1	-	-	-	-	-	-	6.1	5.5	-	6.1	5.5	-
Critical Hdwy Stg 2	-	-	-	-	-	-	6.1	5.5	-	6.1	5.5	-
Follow-up Hdwy	2.2	-	-	2.2	-	-	3.5	4	3.3	3.5	4	3.3
Pot Cap-1 Maneuver	1397	-	-	1450	-	-	551	525	911	554	530	870
Stage 1	-	-	-	-	-	-	844	767	-	759	704	-
Stage 2	-	-	-	-	-	-	757	696	-	845	764	-
Platoon blocked, %		-	-		-	-						
Mov Cap-1 Maneuver	1392	-	-	1436	-	-	522	499	901	525	504	867
Mov Cap-2 Maneuver	-	-	-	-	-	-	522	499	-	525	504	-
Stage 1	-	-	-	-	-	-	829	752	-	749	681	-
Stage 2	-	-	-	-	-	-	724	674	-	820	749	-

Approach	EB	WB	NB	SB
HCM Control Delay, s	0.6	1.2	10.1	11.6
HCM LOS			B	B

Minor Lane/Major Mvmt	NBLn1	EBL	EBT	EBR	WBL	WBT	WBR	SBLn1
Capacity (veh/h)	728	1392	-	-	1436	-	-	580
HCM Lane V/C Ratio	0.03	0.008	-	-	0.025	-	-	0.063
HCM Control Delay (s)	10.1	7.6	0	-	7.6	0	-	11.6
HCM Lane LOS	B	A	A	-	A	A	-	B
HCM 95th %tile Q(veh)	0.1	0	-	-	0.1	-	-	0.2

Intersection	
Int Delay, s/veh	6.5

Movement	EBL	EBT	EBR	WBL	WBT	WBR	NBL	NBT	NBR	SBL	SBT	SBR
Lane Configurations												
Traffic Vol, veh/h	49	111	2	9	133	110	2	1	4	115	5	92
Future Vol, veh/h	49	111	2	9	133	110	2	1	4	115	5	92
Conflicting Peds, #/hr	8	0	11	11	0	8	2	0	3	3	0	2
Sign Control	Free	Free	Free	Free	Free	Free	Stop	Stop	Stop	Stop	Stop	Stop
RT Channelized	-	-	None	-	-	None	-	-	None	-	-	None
Storage Length	-	-	-	-	-	-	-	-	-	-	-	-
Veh in Median Storage, #	-	0	-	-	0	-	-	0	-	-	0	-
Grade, %	-	0	-	-	0	-	-	0	-	-	0	-
Peak Hour Factor	84	84	84	84	84	84	84	84	84	84	84	84
Heavy Vehicles, %	0	0	0	0	0	0	0	0	0	1	1	1
Mvmt Flow	58	132	2	11	158	131	2	1	5	137	6	110

Major/Minor	Major1			Major2			Minor1			Minor2		
Conflicting Flow All	297	0	0	145	0	0	566	579	147	509	515	234
Stage 1	-	-	-	-	-	-	260	260	-	254	254	-
Stage 2	-	-	-	-	-	-	306	319	-	255	261	-
Critical Hdwy	4.1	-	-	4.1	-	-	7.1	6.5	6.2	7.11	6.51	6.21
Critical Hdwy Stg 1	-	-	-	-	-	-	6.1	5.5	-	6.11	5.51	-
Critical Hdwy Stg 2	-	-	-	-	-	-	6.1	5.5	-	6.11	5.51	-
Follow-up Hdwy	2.2	-	-	2.2	-	-	3.5	4	3.3	3.509	4.009	3.309
Pot Cap-1 Maneuver	1276	-	-	1450	-	-	438	429	905	476	465	808
Stage 1	-	-	-	-	-	-	749	697	-	753	699	-
Stage 2	-	-	-	-	-	-	708	657	-	752	694	-
Platoon blocked, %		-	-		-	-						
Mov Cap-1 Maneuver	1266	-	-	1435	-	-	353	397	893	446	430	800
Mov Cap-2 Maneuver	-	-	-	-	-	-	353	397	-	446	430	-
Stage 1	-	-	-	-	-	-	704	656	-	710	687	-
Stage 2	-	-	-	-	-	-	599	646	-	707	653	-

Approach	EB	WB	NB	SB
HCM Control Delay, s	2.4	0.3	11.6	16.9
HCM LOS			B	C

Minor Lane/Major Mvmt	NBLn1	EBL	EBT	EBR	WBL	WBT	WBR	SBLn1
Capacity (veh/h)	553	1266	-	-	1435	-	-	551
HCM Lane V/C Ratio	0.015	0.046	-	-	0.007	-	-	0.458
HCM Control Delay (s)	11.6	8	0	-	7.5	0	-	16.9
HCM Lane LOS	B	A	A	-	A	A	-	C
HCM 95th %tile Q(veh)	0	0.1	-	-	0	-	-	2.4

Intersection	
Int Delay, s/veh	3.4

Movement	WBL	WBR	NBT	NBR	SBL	SBT
Lane Configurations						
Traffic Vol, veh/h	99	18	111	108	23	99
Future Vol, veh/h	99	18	111	108	23	99
Conflicting Peds, #/hr	0	0	0	0	0	0
Sign Control	Stop	Stop	Free	Free	Free	Free
RT Channelized	-	None	-	None	-	None
Storage Length	0	-	-	-	-	-
Veh in Median Storage, #	0	-	0	-	-	0
Grade, %	0	-	0	-	-	0
Peak Hour Factor	89	89	89	89	89	89
Heavy Vehicles, %	3	3	2	2	4	4
Mvmt Flow	111	20	125	121	26	111

Major/Minor	Minor1		Major1		Major2	
Conflicting Flow All	349	186	0	0	246	0
Stage 1	186	-	-	-	-	-
Stage 2	163	-	-	-	-	-
Critical Hdwy	6.43	6.23	-	-	4.14	-
Critical Hdwy Stg 1	5.43	-	-	-	-	-
Critical Hdwy Stg 2	5.43	-	-	-	-	-
Follow-up Hdwy	3.527	3.327	-	-	2.236	-
Pot Cap-1 Maneuver	646	854	-	-	1308	-
Stage 1	843	-	-	-	-	-
Stage 2	864	-	-	-	-	-
Platoon blocked, %			-	-		-
Mov Cap-1 Maneuver	632	854	-	-	1308	-
Mov Cap-2 Maneuver	632	-	-	-	-	-
Stage 1	825	-	-	-	-	-
Stage 2	864	-	-	-	-	-

Approach	WB	NB	SB
HCM Control Delay, s	11.8	0	1.5
HCM LOS	B		

Minor Lane/Major Mvmt	NBT	NBR	WBLn1	SBL	SBT
Capacity (veh/h)	-	-	658	1308	-
HCM Lane V/C Ratio	-	-	0.2	0.02	-
HCM Control Delay (s)	-	-	11.8	7.8	0
HCM Lane LOS	-	-	B	A	A
HCM 95th %tile Q(veh)	-	-	0.7	0.1	-

Intersection	
Int Delay, s/veh	2.9

Movement	EBL	EBT	EBR	WBL	WBT	WBR	NBL	NBT	NBR	SBL	SBT	SBR
Lane Configurations												
Traffic Vol, veh/h	12	153	10	10	78	11	11	1	23	27	0	20
Future Vol, veh/h	12	153	10	10	78	11	11	1	23	27	0	20
Conflicting Peds, #/hr	2	0	3	3	0	2	2	0	2	2	0	2
Sign Control	Free	Free	Free	Free	Free	Free	Stop	Stop	Stop	Stop	Stop	Stop
RT Channelized	-	-	None	-	-	None	-	-	None	-	-	None
Storage Length	-	-	-	-	-	-	-	-	-	-	-	-
Veh in Median Storage, #	-	0	-	-	0	-	-	0	-	-	0	-
Grade, %	-	0	-	-	0	-	-	0	-	-	0	-
Peak Hour Factor	84	84	84	84	84	84	84	84	84	84	84	84
Heavy Vehicles, %	1	1	1	4	4	4	4	4	4	0	0	0
Mvmt Flow	14	182	12	12	93	13	13	1	27	32	0	24

Major/Minor	Major1			Major2			Minor1			Minor2		
Conflicting Flow All	108	0	0	197	0	0	357	351	193	358	351	104
Stage 1	-	-	-	-	-	-	219	219	-	126	126	-
Stage 2	-	-	-	-	-	-	138	132	-	232	225	-
Critical Hdwy	4.11	-	-	4.14	-	-	7.14	6.54	6.24	7.1	6.5	6.2
Critical Hdwy Stg 1	-	-	-	-	-	-	6.14	5.54	-	6.1	5.5	-
Critical Hdwy Stg 2	-	-	-	-	-	-	6.14	5.54	-	6.1	5.5	-
Follow-up Hdwy	2.209	-	-	2.236	-	-	3.536	4.036	3.336	3.5	4	3.3
Pot Cap-1 Maneuver	1489	-	-	1364	-	-	595	570	843	601	577	956
Stage 1	-	-	-	-	-	-	779	718	-	883	796	-
Stage 2	-	-	-	-	-	-	860	783	-	775	721	-
Platoon blocked, %		-	-		-	-						
Mov Cap-1 Maneuver	1486	-	-	1360	-	-	569	556	839	570	563	952
Mov Cap-2 Maneuver	-	-	-	-	-	-	569	556	-	570	563	-
Stage 1	-	-	-	-	-	-	768	708	-	872	787	-
Stage 2	-	-	-	-	-	-	829	774	-	739	711	-

Approach	EB	WB	NB	SB
HCM Control Delay, s	0.5	0.8	10.3	10.7
HCM LOS			B	B

Minor Lane/Major Mvmt	NBLn1	EBL	EBT	EBR	WBL	WBT	WBR	SBLn1
Capacity (veh/h)	721	1486	-	-	1360	-	-	687
HCM Lane V/C Ratio	0.058	0.01	-	-	0.009	-	-	0.081
HCM Control Delay (s)	10.3	7.4	0	-	7.7	0	-	10.7
HCM Lane LOS	B	A	A	-	A	A	-	B
HCM 95th %tile Q(veh)	0.2	0	-	-	0	-	-	0.3

Intersection	
Int Delay, s/veh	4.6

Movement	EBL	EBT	EBR	WBL	WBT	WBR	NBL	NBT	NBR	SBL	SBT	SBR
Lane Configurations												
Traffic Vol, veh/h	77	161	0	2	77	78	1	0	4	79	0	38
Future Vol, veh/h	77	161	0	2	77	78	1	0	4	79	0	38
Conflicting Peds, #/hr	6	0	4	4	0	6	1	0	3	3	0	1
Sign Control	Free	Free	Free	Free	Free	Free	Stop	Stop	Stop	Stop	Stop	Stop
RT Channelized	-	-	None	-	-	None	-	-	None	-	-	None
Storage Length	-	-	-	-	-	-	-	-	-	-	-	-
Veh in Median Storage, #	-	0	-	-	0	-	-	0	-	-	0	-
Grade, %	-	0	-	-	0	-	-	0	-	-	0	-
Peak Hour Factor	83	83	83	83	83	83	83	83	83	83	83	83
Heavy Vehicles, %	1	1	1	3	3	3	0	0	0	4	4	4
Mvmt Flow	93	194	0	2	93	94	1	0	5	95	0	46

Major/Minor	Major1			Major2			Minor1			Minor2		
Conflicting Flow All	193	0	0	198	0	0	552	581	201	536	534	147
Stage 1	-	-	-	-	-	-	384	384	-	150	150	-
Stage 2	-	-	-	-	-	-	168	197	-	386	384	-
Critical Hdwy	4.11	-	-	4.13	-	-	7.1	6.5	6.2	7.14	6.54	6.24
Critical Hdwy Stg 1	-	-	-	-	-	-	6.1	5.5	-	6.14	5.54	-
Critical Hdwy Stg 2	-	-	-	-	-	-	6.1	5.5	-	6.14	5.54	-
Follow-up Hdwy	2.209	-	-	2.227	-	-	3.5	4	3.3	3.536	4.036	3.336
Pot Cap-1 Maneuver	1386	-	-	1369	-	-	447	428	845	452	449	895
Stage 1	-	-	-	-	-	-	643	615	-	848	769	-
Stage 2	-	-	-	-	-	-	839	742	-	633	608	-
Platoon blocked, %		-	-		-	-						
Mov Cap-1 Maneuver	1378	-	-	1364	-	-	397	391	839	419	410	889
Mov Cap-2 Maneuver	-	-	-	-	-	-	397	391	-	419	410	-
Stage 1	-	-	-	-	-	-	592	566	-	779	763	-
Stage 2	-	-	-	-	-	-	793	736	-	580	559	-

Approach	EB	WB	NB	SB
HCM Control Delay, s	2.5	0.1	10.3	14.8
HCM LOS			B	B

Minor Lane/Major Mvmt	NBLn1	EBL	EBT	EBR	WBL	WBT	WBR	SBLn1
Capacity (veh/h)	686	1378	-	-	1364	-	-	506
HCM Lane V/C Ratio	0.009	0.067	-	-	0.002	-	-	0.279
HCM Control Delay (s)	10.3	7.8	0	-	7.6	0	-	14.8
HCM Lane LOS	B	A	A	-	A	A	-	B
HCM 95th %tile Q(veh)	0	0.2	-	-	0	-	-	1.1

Intersection	
Int Delay, s/veh	3.9

Movement	WBL	WBR	NBT	NBR	SBL	SBT
Lane Configurations						
Traffic Vol, veh/h	87	35	67	82	31	107
Future Vol, veh/h	87	35	67	82	31	107
Conflicting Peds, #/hr	1	2	0	1	1	0
Sign Control	Stop	Stop	Free	Free	Free	Free
RT Channelized	-	None	-	None	-	None
Storage Length	0	-	-	-	-	-
Veh in Median Storage, #	0	-	0	-	-	0
Grade, %	0	-	0	-	-	0
Peak Hour Factor	86	86	86	86	86	86
Heavy Vehicles, %	1	1	1	1	2	2
Mvmt Flow	101	41	78	95	36	124

Major/Minor	Minor1		Major1		Major2	
Conflicting Flow All	324	129	0	0	174	0
Stage 1	127	-	-	-	-	-
Stage 2	197	-	-	-	-	-
Critical Hdwy	6.41	6.21	-	-	4.12	-
Critical Hdwy Stg 1	5.41	-	-	-	-	-
Critical Hdwy Stg 2	5.41	-	-	-	-	-
Follow-up Hdwy	3.509	3.309	-	-	2.218	-
Pot Cap-1 Maneuver	672	924	-	-	1403	-
Stage 1	901	-	-	-	-	-
Stage 2	839	-	-	-	-	-
Platoon blocked, %			-	-		-
Mov Cap-1 Maneuver	652	921	-	-	1402	-
Mov Cap-2 Maneuver	652	-	-	-	-	-
Stage 1	875	-	-	-	-	-
Stage 2	838	-	-	-	-	-

Approach	WB	NB	SB
HCM Control Delay, s	11.3	0	1.7
HCM LOS	B		

Minor Lane/Major Mvmt	NBT	NBR	WBLn1	SBL	SBT
Capacity (veh/h)	-	-	712	1402	-
HCM Lane V/C Ratio	-	-	0.199	0.026	-
HCM Control Delay (s)	-	-	11.3	7.6	0
HCM Lane LOS	-	-	B	A	A
HCM 95th %tile Q(veh)	-	-	0.7	0.1	-

Intersection	
Int Delay, s/veh	2.5

Movement	EBL	EBT	EBR	WBL	WBT	WBR	NBL	NBT	NBR	SBL	SBT	SBR
Lane Configurations												
Traffic Vol, veh/h	12	110	8	31	142	29	4	2	13	27	3	9
Future Vol, veh/h	12	110	8	31	142	29	4	2	13	27	3	9
Conflicting Peds, #/hr	4	0	10	10	0	4	0	0	1	1	0	0
Sign Control	Free	Free	Free	Free	Free	Free	Stop	Stop	Stop	Stop	Stop	Stop
RT Channelized	-	-	None	-	-	None	-	-	None	-	-	None
Storage Length	-	-	-	-	-	-	-	-	-	-	-	-
Veh in Median Storage, #	-	0	-	-	0	-	-	0	-	-	0	-
Grade, %	-	0	-	-	0	-	-	0	-	-	0	-
Peak Hour Factor	87	87	87	87	87	87	87	87	87	87	87	87
Heavy Vehicles, %	0	0	0	0	0	0	0	0	0	0	0	0
Mvmt Flow	14	126	9	36	163	33	5	2	15	31	3	10

Major/Minor	Major1			Major2			Minor1			Minor2		
Conflicting Flow All	200	0	0	145	0	0	427	441	142	424	429	184
Stage 1	-	-	-	-	-	-	169	169	-	256	256	-
Stage 2	-	-	-	-	-	-	258	272	-	168	173	-
Critical Hdwy	4.1	-	-	4.1	-	-	7.1	6.5	6.2	7.1	6.5	6.2
Critical Hdwy Stg 1	-	-	-	-	-	-	6.1	5.5	-	6.1	5.5	-
Critical Hdwy Stg 2	-	-	-	-	-	-	6.1	5.5	-	6.1	5.5	-
Follow-up Hdwy	2.2	-	-	2.2	-	-	3.5	4	3.3	3.5	4	3.3
Pot Cap-1 Maneuver	1384	-	-	1450	-	-	541	513	911	544	521	864
Stage 1	-	-	-	-	-	-	838	763	-	753	699	-
Stage 2	-	-	-	-	-	-	751	688	-	839	760	-
Platoon blocked, %		-	-		-	-						
Mov Cap-1 Maneuver	1379	-	-	1436	-	-	511	486	901	515	494	861
Mov Cap-2 Maneuver	-	-	-	-	-	-	511	486	-	515	494	-
Stage 1	-	-	-	-	-	-	821	747	-	742	677	-
Stage 2	-	-	-	-	-	-	718	666	-	813	744	-

Approach	EB	WB	NB	SB
HCM Control Delay, s	0.7	1.2	10.2	11.9
HCM LOS			B	B

Minor Lane/Major Mvmt	NBLn1	EBL	EBT	EBR	WBL	WBT	WBR	SBLn1
Capacity (veh/h)	720	1379	-	-	1436	-	-	566
HCM Lane V/C Ratio	0.03	0.01	-	-	0.025	-	-	0.079
HCM Control Delay (s)	10.2	7.6	0	-	7.6	0	-	11.9
HCM Lane LOS	B	A	A	-	A	A	-	B
HCM 95th %tile Q(veh)	0.1	0	-	-	0.1	-	-	0.3

Intersection	
Int Delay, s/veh	6.8

Movement	EBL	EBT	EBR	WBL	WBT	WBR	NBL	NBT	NBR	SBL	SBT	SBR
Lane Configurations												
Traffic Vol, veh/h	53	113	2	9	136	110	2	1	4	115	5	99
Future Vol, veh/h	53	113	2	9	136	110	2	1	4	115	5	99
Conflicting Peds, #/hr	8	0	11	11	0	8	2	0	3	3	0	2
Sign Control	Free	Free	Free	Free	Free	Free	Stop	Stop	Stop	Stop	Stop	Stop
RT Channelized	-	-	None	-	-	None	-	-	None	-	-	None
Storage Length	-	-	-	-	-	-	-	-	-	-	-	-
Veh in Median Storage, #	-	0	-	-	0	-	-	0	-	-	0	-
Grade, %	-	0	-	-	0	-	-	0	-	-	0	-
Peak Hour Factor	84	84	84	84	84	84	84	84	84	84	84	84
Heavy Vehicles, %	0	0	0	0	0	0	0	0	0	1	1	1
Mvmt Flow	63	135	2	11	162	131	2	1	5	137	6	118

Major/Minor	Major1			Major2			Minor1			Minor2		
Conflicting Flow All	301	0	0	148	0	0	587	596	150	526	532	238
Stage 1	-	-	-	-	-	-	273	273	-	258	258	-
Stage 2	-	-	-	-	-	-	314	323	-	268	274	-
Critical Hdwy	4.1	-	-	4.1	-	-	7.1	6.5	6.2	7.11	6.51	6.21
Critical Hdwy Stg 1	-	-	-	-	-	-	6.1	5.5	-	6.11	5.51	-
Critical Hdwy Stg 2	-	-	-	-	-	-	6.1	5.5	-	6.11	5.51	-
Follow-up Hdwy	2.2	-	-	2.2	-	-	3.5	4	3.3	3.509	4.009	3.309
Pot Cap-1 Maneuver	1272	-	-	1446	-	-	424	420	902	464	455	803
Stage 1	-	-	-	-	-	-	737	688	-	749	696	-
Stage 2	-	-	-	-	-	-	701	654	-	740	685	-
Platoon blocked, %		-	-		-	-						
Mov Cap-1 Maneuver	1262	-	-	1431	-	-	336	387	890	434	419	795
Mov Cap-2 Maneuver	-	-	-	-	-	-	336	387	-	434	419	-
Stage 1	-	-	-	-	-	-	690	645	-	703	684	-
Stage 2	-	-	-	-	-	-	585	643	-	693	642	-

Approach	EB	WB	NB	SB
HCM Control Delay, s	2.5	0.3	11.8	17.5
HCM LOS			B	C

Minor Lane/Major Mvmt	NBLn1	EBL	EBT	EBR	WBL	WBT	WBR	SBLn1
Capacity (veh/h)	537	1262	-	-	1431	-	-	546
HCM Lane V/C Ratio	0.016	0.05	-	-	0.007	-	-	0.477
HCM Control Delay (s)	11.8	8	0	-	7.5	0	-	17.5
HCM Lane LOS	B	A	A	-	A	A	-	C
HCM 95th %tile Q(veh)	0	0.2	-	-	0	-	-	2.6

CONCEPTUAL STORMWATER MANAGEMENT PLAN

30TH STREET SUBDIVISION

3750 MAY STREET
HOOD RIVER, OREGON

APRIL 2020

PREPARED FOR:

IBC CONSTRUCTION, LLC

HOOD RIVER, OREGON

PREPARED BY

HRK ENGINEERING & FIELD SERVICES

489 N. 8TH STREET, SUITE 201
HOOD RIVER, OREGON 97031

1 INTRODUCTION

This Conceptual Stormwater Management plan and the accompanying preliminary drawings are submitted for review by Public Works for compliance with Engineering Standards and Conditions of Planning Approval. This report has been prepared in conformance with the City of Hood River Engineering Standards to provide the conceptual layout of the civil site improvements for the 30th Street Subdivision.

In the next phase of the project, the applicant will submit Construction Drawings on the engineering comments made on this submittal.

2 PROJECT OVERVIEW

The 30th Street Subdivision site is identified as Tax Lot 200 in the records of Hood River County. The southern boundary of Tax Lot 200, which is the northern Boundary of Tax Lot 300, will be adjusted as part of the development creating a new lot of 3.12 acres which will be platted into the single-family lots.

The development will create by plat:

- 18 single-family residential lots,
- An out-lot dedicated to stormwater treatment,
- Rights-of way for the interior local streets Montello Avenue, Prospect Street and an alley,
- An additional six-foot of right-of way to the local 30th Street adjacent on the east,
- Easements as required for vehicular access and public utilities.

3 EXISITNG CONDITIONS

The project site is surrounded platted lots in a single-family use on the north and east and by unplatted, agricultural uses on the south and west. The property has been developed in agricultural used primarily as pasture. There are currently no structures on or vehicular access to the site.

The topography is steeply sloped north-south along grades of 8-12% and vegetated with grasses and bushes, e.g. blackberries. Drainage flows to the north in a sheet flow condition with some minor off-site flow contributing from the south.

There are no visible drainage or irrigation channels on the property.

Soils have been mapped by the National Resources Conservation Service and are classified as Rockford Stony Loam, Hydrologic Soil Group C.

4 PROPOSED IMPROVMENTS

The interior streets, Monterro and Prospect will be oriented in an east-west direction more or less parallel with the existing topography. An alley along the west line will be constructed for utilities and vehicular access in a dedicated right-of-way. An east west alley will be constructed in a public easement between the two local streets to provide rear loaded access to the southern tier of lots fronted by Prospect and the middle tier or lots fronted by Montello. The northern tier of lots will be front-loaded with access from Montero.

The lots will discharge to the curb & gutter of the interior streets or an inverted swale in the east-west alleys. Inlets and storm sewers will be located at intersections to obviate the need for cross-pans. The street gutters and storm sewers will drain northerly and westerly in channelized or pipe flow to the pond located in the northwest corner of the site.

The pond will be located on a dedicated lot and will provide storm water quality treatment and detention as required by City standards. The pond will discharge to a new channel constructed for the purpose that will convey flow westerly and northerly in an open ditch and discharge to Henderson Creek. Separate easements will be obtained for the site's discharge channel.

The hydrologic analysis for the conceptual layout is limited to modeling the runoff in the pre- and post-developed condition for the 25-year storm frequency to estimate the volume that will be required to provide water-quality treatment and attenuate post-developed flow to the pre-developed condition.

The watershed was conceptually modeled using the Hydraflow Hydrographs Extension for Autodesk. The pond was sized at 90 x 20 ft with a 9.0-foot walls. The rates for the 25-year event modeled as 1.1 cfs pre-developed and 15.6 cfs developed which includes 1.9 cfs of off-site flow. The allowable release rate then was calculated as the sum of the pre-developed rate plus the developed offsite rate or 1.1 + 1.9 = 3.0 cfs. The conceptual pond would store a maximum amount of 20,973 cf at an elevation of 441.7 (7.7 foot wall height) at a release rate of 2.2 cfs.

Consequently the lot as sized is large enough to accommodate the infrastructure required to provide water quality treatment and detention storage in the developed condition.

APPENDIX

Map Scale: 1:1,230 if printed on A portrait (8.5" x 11") sheet.

N

Meters: 0 15 30 60 90

Feet: 0 50 100 200 300

Map projection: Web Mercator Corner coordinates: WGS84 Edge tics: UTM Zone 10N WGS84

MAP LEGEND

Area of Interest (AOI)

Area of Interest (AOI)

Soils

Soil Map Unit Polygons

Soil Map Unit Lines

Soil Map Unit Points

Special Point Features

Blowout

Borrow Pit

Clay Spot

Closed Depression

Gravel Pit

Gravelly Spot

Landfill

Lava Flow

Marsh or swamp

Mine or Quarry

Miscellaneous Water

Perennial Water

Rock Outcrop

Saline Spot

Sandy Spot

Severely Eroded Spot

Sinkhole

Slide or Slip

Sodic Spot

Spoil Area

Stony Spot

Very Stony Spot

Wet Spot

Other

Special Line Features

Water Features

Streams and Canals

Transportation

Rails

Interstate Highways

US Routes

Major Roads

Local Roads

Background

Aerial Photography

MAP INFORMATION

The soil surveys that comprise your AOI were mapped at 1:20,000.

Warning: Soil Map may not be valid at this scale.

Enlargement of maps beyond the scale of mapping can cause misunderstanding of the detail of mapping and accuracy of soil line placement. The maps do not show the small areas of contrasting soils that could have been shown at a more detailed scale.

Please rely on the bar scale on each map sheet for map measurements.

Source of Map: Natural Resources Conservation Service
Web Soil Survey URL:
Coordinate System: Web Mercator (EPSG:3857)

Maps from the Web Soil Survey are based on the Web Mercator projection, which preserves direction and shape but distorts distance and area. A projection that preserves area, such as the Albers equal-area conic projection, should be used if more accurate calculations of distance or area are required.

This product is generated from the USDA-NRCS certified data as of the version date(s) listed below.

Soil Survey Area: Hood River County Area, Oregon
Survey Area Data: Version 13, Sep 10, 2019

Soil map units are labeled (as space allows) for map scales 1:50,000 or larger.

Date(s) aerial images were photographed: Sep 5, 2014—Sep 21, 2016

The orthophoto or other base map on which the soil lines were compiled and digitized probably differs from the background imagery displayed on these maps. As a result, some minor shifting of map unit boundaries may be evident.

Map Unit Legend

Map Unit Symbol	Map Unit Name	Acres in AOI	Percent of AOI
21C	Rockford stony loam, 8 to 12 percent slopes	7.0	100.0%
Totals for Area of Interest		**7.0**	**100.0%**

Hood River County Area, Oregon

21C—Rockford stony loam, 8 to 12 percent slopes

Map Unit Setting

National map unit symbol: 22jq
Elevation: 100 to 2,000 feet
Mean annual precipitation: 30 to 45 inches
Mean annual air temperature: 45 to 51 degrees F
Frost-free period: 120 to 180 days
Farmland classification: Farmland of statewide importance

Map Unit Composition

Rockford and similar soils: 90 percent
Estimates are based on observations, descriptions, and transects of the mapunit.

Description of Rockford

Setting

Landform: Terraces
Landform position (three-dimensional): Riser
Down-slope shape: Linear
Across-slope shape: Linear
Parent material: Very stony glaciofluvial deposits derived from volcanic rock

Typical profile

Ap - 0 to 7 inches: stony loam
A3 - 7 to 12 inches: cobbly loam
B2 - 12 to 24 inches: very cobbly loam
2C - 24 to 60 inches: very cobbly loam

Properties and qualities

Slope: 8 to 12 percent
Depth to restrictive feature: More than 80 inches
Natural drainage class: Well drained
Capacity of the most limiting layer to transmit water (Ksat): Moderately high (0.20 to 0.57 in/hr)
Depth to water table: More than 80 inches
Frequency of flooding: None
Frequency of ponding: None
Available water storage in profile: Low (about 5.7 inches)

Interpretive groups

Land capability classification (irrigated): 4s
Land capability classification (nonirrigated): 6s
Hydrologic Soil Group: C

Hydric soil rating: No

Data Source Information

Soil Survey Area: Hood River County Area, Oregon
Survey Area Data: Version 13, Sep 10, 2019

Watershed Model Schematic

Hydraflow Hydrographs Extension for Autodesk® Civil 3D® by Autodesk, Inc. v2020

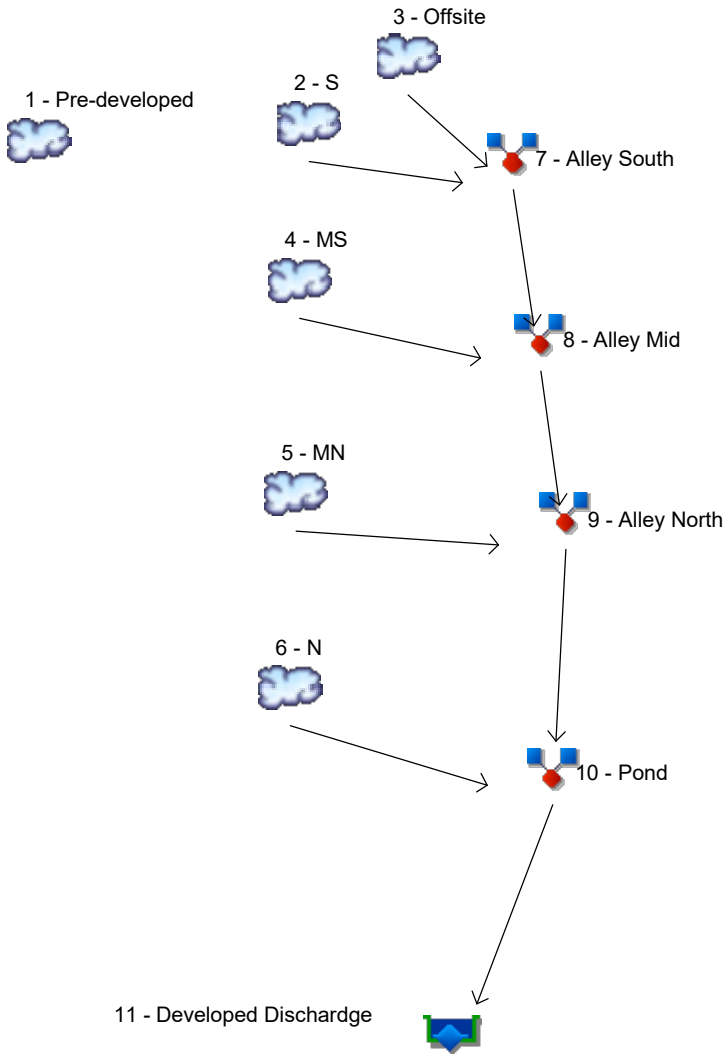

Legend

Hyd.	Origin	Description
1	SCS Runoff	Pre-developed
2	SCS Runoff	S
3	SCS Runoff	Offsite
4	SCS Runoff	MS
5	SCS Runoff	MN
6	SCS Runoff	N
7	Combine	Alley South
8	Combine	Alley Mid
9	Combine	Alley North
10	Combine	Pond
11	Reservoir	Developed Dischardge

Hydrograph Return Period Recap

Hydraflow Hydrographs Extension for Autodesk® Civil 3D® by Autodesk, Inc. v2020

Hyd. No.	Hydrograph type (origin)	Inflow hyd(s)	Peak Outflow (cfs)								Hydrograph Description
			1-yr	2-yr	3-yr	5-yr	10-yr	25-yr	50-yr	100-yr	
1	SCS Runoff	------	-------	-------	-------	-------	-------	1.056	-------	-------	Pre-developed
2	SCS Runoff	------	-------	-------	-------	-------	-------	3.425	-------	-------	S
3	SCS Runoff	------	-------	-------	-------	-------	-------	1.944	-------	-------	Offsite
4	SCS Runoff	------	-------	-------	-------	-------	-------	4.121	-------	-------	MS
5	SCS Runoff	------	-------	-------	-------	-------	-------	3.167	-------	-------	MN
6	SCS Runoff	------	-------	-------	-------	-------	-------	4.214	-------	-------	N
7	Combine	2, 3,	-------	-------	-------	-------	-------	4.375	-------	-------	Alley South
8	Combine	4, 7	-------	-------	-------	-------	-------	8.496	-------	-------	Alley Mid
9	Combine	5, 8	-------	-------	-------	-------	-------	11.66	-------	-------	Alley North
10	Combine	6, 9	-------	-------	-------	-------	-------	15.64	-------	-------	Pond
11	Reservoir	10	-------	-------	-------	-------	-------	2.204	-------	-------	Developed Dischardge

Hydrograph Summary Report

Hydraflow Hydrographs Extension for Autodesk® Civil 3D® by Autodesk, Inc. v2020

Hyd. No.	Hydrograph type (origin)	Peak flow (cfs)	Time interval (min)	Time to Peak (min)	Hyd. volume (cuft)	Inflow hyd(s)	Maximum elevation (ft)	Total strge used (cuft)	Hydrograph Description
1	SCS Runoff	1.056	2	488	22,547	------	------	------	Pre-developed
2	SCS Runoff	3.425	2	716	7,209	------	------	------	S
3	SCS Runoff	1.944	2	730	7,584	------	------	------	Offsite
4	SCS Runoff	4.121	2	718	9,740	------	------	------	MS
5	SCS Runoff	3.167	2	718	7,485	------	------	------	MN
6	SCS Runoff	4.214	2	720	11,208	------	------	------	N
7	Combine	4.375	2	718	14,793	2, 3,	------	------	Alley South
8	Combine	8.496	2	718	24,534	4, 7	------	------	Alley Mid
9	Combine	11.66	2	718	32,018	5, 8	------	------	Alley North
10	Combine	15.64	2	718	43,226	6, 9	------	------	Pond
11	Reservoir	2.204	2	750	39,191	10	441.69	20,973	Developed Dischardge

Hydrograph Report

Hydraflow Hydrographs Extension for Autodesk® Civil 3D® by Autodesk, Inc. v2020 Wednesday, 04 / 8 / 2020

Hyd. No. 1

Pre-developed

Hydrograph type	= SCS Runoff	Peak discharge	= 1.056 cfs
Storm frequency	= 25 yrs	Time to peak	= 8.13 hrs
Time interval	= 2 min	Hyd. volume	= 22,547 cuft
Drainage area	= 4.830 ac	Curve number	= 70
Basin Slope	= 10.0 %	Hydraulic length	= 675 ft
Tc method	= TR55	Time of conc. (Tc)	= 23.00 min
Total precip.	= 3.90 in	Distribution	= Type IA
Storm duration	= 24 hrs	Shape factor	= 484

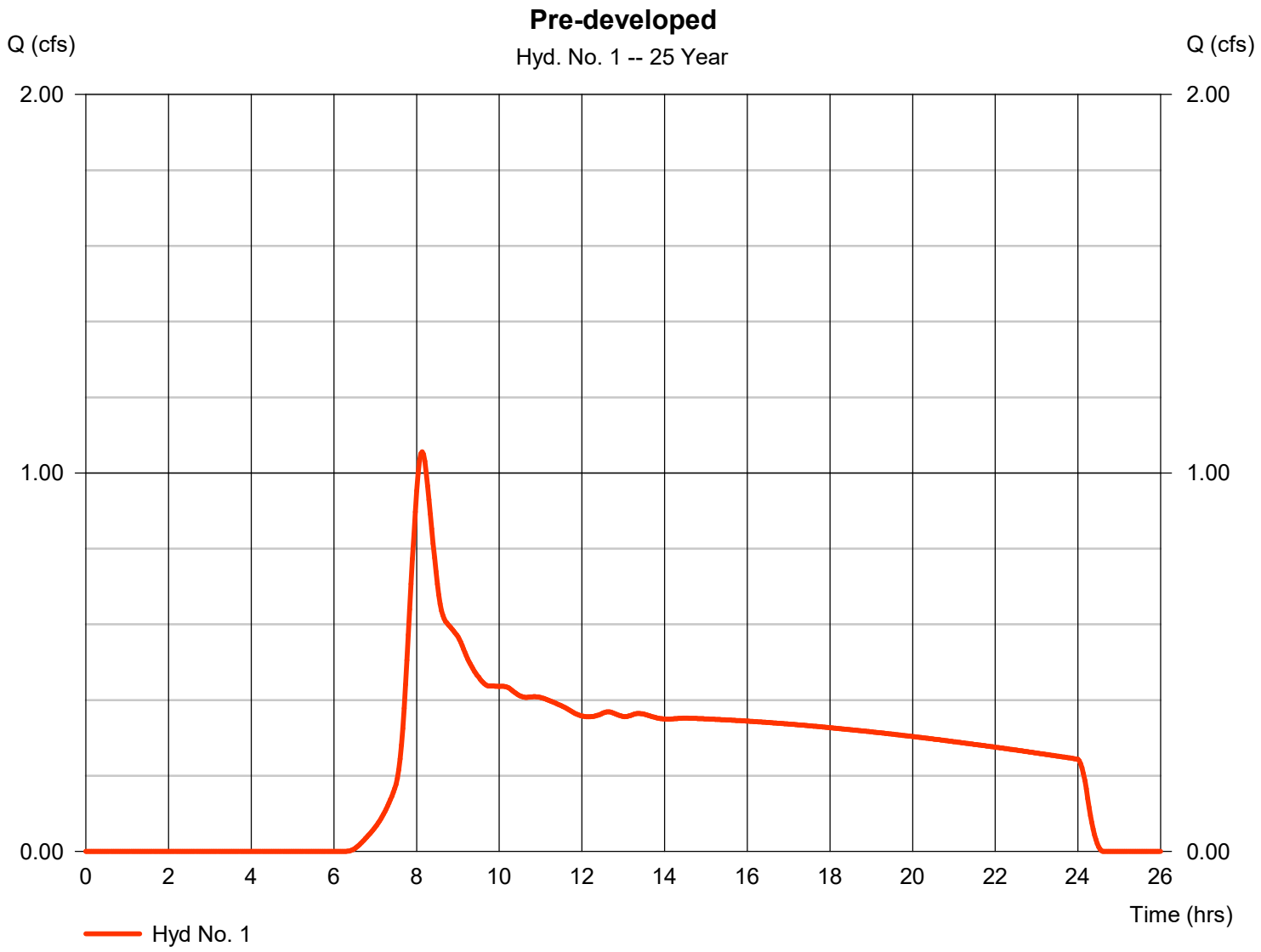

TR55 Tc Worksheet

Hydraflow Hydrographs Extension for Autodesk® Civil 3D® by Autodesk, Inc. v2020

Hyd. No. 1

Pre-developed

Description	A		B		C		Totals
Sheet Flow							
Manning's n-value	= 0.240		0.011		0.011		
Flow length (ft)	= 300.0		0.0		0.0		
Two-year 24-hr precip. (in)	= 2.20		0.00		0.00		
Land slope (%)	= 10.00		0.00		0.00		
Travel Time (min)	**= 21.77**	**+**	**0.00**	**+**	**0.00**	**=**	**21.77**
Shallow Concentrated Flow							
Flow length (ft)	= 375.00		0.00		0.00		
Watercourse slope (%)	= 10.00		0.00		0.00		
Surface description	= Unpaved		Paved		Paved		
Average velocity (ft/s)	=5.10		0.00		0.00		
Travel Time (min)	**= 1.22**	**+**	**0.00**	**+**	**0.00**	**=**	**1.22**
Channel Flow							
X sectional flow area (sqft)	= 0.00		0.00		0.00		
Wetted perimeter (ft)	= 0.00		0.00		0.00		
Channel slope (%)	= 0.00		0.00		0.00		
Manning's n-value	= 0.015		0.015		0.015		
Velocity (ft/s)	=0.00						
			0.00				
					0.00		
Flow length (ft)	({0})0.0		0.0		0.0		
Travel Time (min)	**= 0.00**	**+**	**0.00**	**+**	**0.00**	**=**	**0.00**

Total Travel Time, Tc ..... 23.00 min

Hydrograph Report

Hydraflow Hydrographs Extension for Autodesk® Civil 3D® by Autodesk, Inc. v2020 Wednesday, 04 / 8 / 2020

Hyd. No. 2

S

Hydrograph type	= SCS Runoff	Peak discharge	= 3.425 cfs
Storm frequency	= 25 yrs	Time to peak	= 11.93 hrs
Time interval	= 2 min	Hyd. volume	= 7,209 cuft
Drainage area	= 0.750 ac	Curve number	= 90
Basin Slope	= 0.0 %	Hydraulic length	= 0 ft
Tc method	= TR55	Time of conc. (Tc)	= 5.30 min
Total precip.	= 3.90 in	Distribution	= Type II
Storm duration	= 24 hrs	Shape factor	= 484

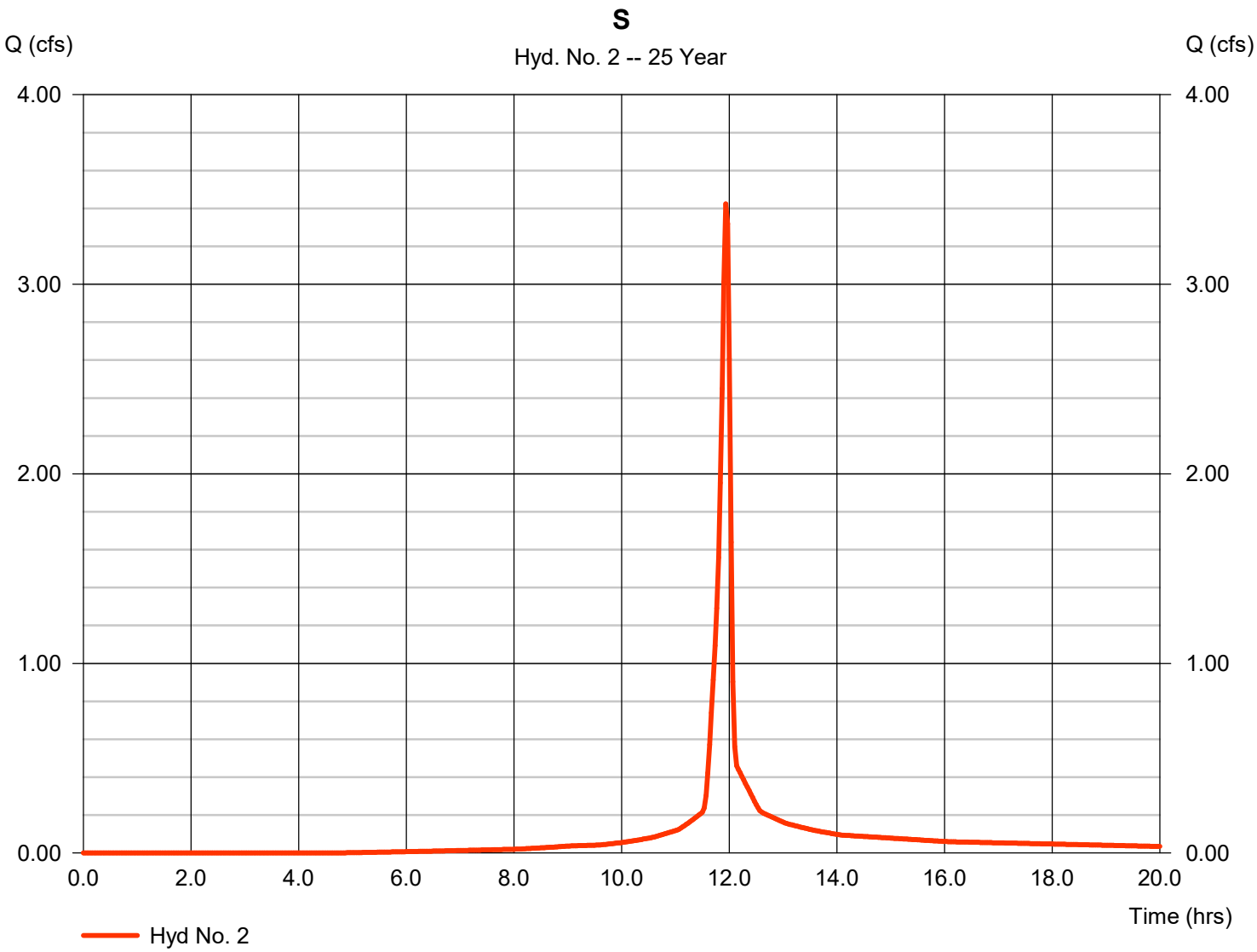

TR55 Tc Worksheet

Hydraflow Hydrographs Extension for Autodesk® Civil 3D® by Autodesk, Inc. v2020

Hyd. No. 2

S

Description	A		B		C		Totals
Sheet Flow							
Manning's n-value	= 0.170		0.011		0.011		
Flow length (ft)	= 15.0		0.0		0.0		
Two-year 24-hr precip. (in)	= 2.00		0.00		0.00		
Land slope (%)	= 2.00		0.00		0.00		
Travel Time (min)	**= 3.00**	**+**	**0.00**	**+**	**0.00**	**=**	**3.00**
Shallow Concentrated Flow							
Flow length (ft)	= 280.00		0.00		0.00		
Watercourse slope (%)	= 1.00		0.00		0.00		
Surface description	= Paved		Paved		Paved		
Average velocity (ft/s)	=2.03		0.00		0.00		
Travel Time (min)	**= 2.30**	**+**	**0.00**	**+**	**0.00**	**=**	**2.30**
Channel Flow							
X sectional flow area (sqft)	= 0.00		0.00		0.00		
Wetted perimeter (ft)	= 0.00		0.00		0.00		
Channel slope (%)	= 0.00		0.00		0.00		
Manning's n-value	= 0.015		0.015		0.015		
Velocity (ft/s)	=0.00						
			0.00				
					0.00		
Flow length (ft)	({0})0.0		0.0		0.0		
Travel Time (min)	**= 0.00**	**+**	**0.00**	**+**	**0.00**	**=**	**0.00**

Total Travel Time, Tc ..... 5.30 min

Hydrograph Report

Hydraflow Hydrographs Extension for Autodesk® Civil 3D® by Autodesk, Inc. v2020 Wednesday, 04 / 8 / 2020

Hyd. No. 3

Offsite

Hydrograph type	= SCS Runoff	Peak discharge	= 1.944 cfs
Storm frequency	= 25 yrs	Time to peak	= 12.17 hrs
Time interval	= 2 min	Hyd. volume	= 7,584 cuft
Drainage area	= 1.680 ac	Curve number	= 70
Basin Slope	= 0.0 %	Hydraulic length	= 0 ft
Tc method	= TR55	Time of conc. (Tc)	= 24.50 min
Total precip.	= 3.90 in	Distribution	= Type II
Storm duration	= 24 hrs	Shape factor	= 484

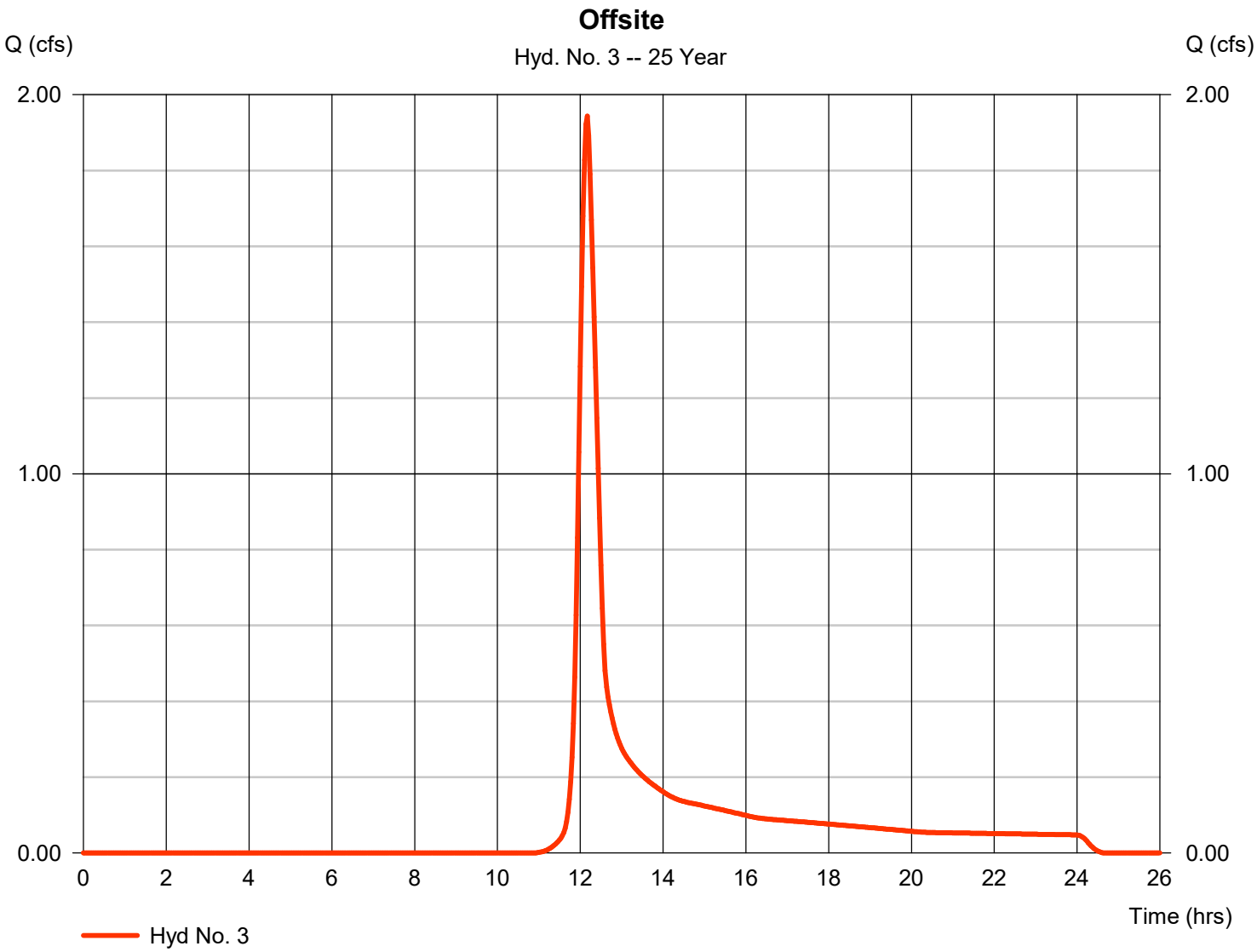

TR55 Tc Worksheet

Hydraflow Hydrographs Extension for Autodesk® Civil 3D® by Autodesk, Inc. v2020

Hyd. No. 3

Offsite

Description	A		B		C		Totals
Sheet Flow							
Manning's n-value	= 0.240		0.011		0.011		
Flow length (ft)	= 300.0		0.0		0.0		
Two-year 24-hr precip. (in)	= 2.00		0.00		0.00		
Land slope (%)	= 9.00		0.00		0.00		
Travel Time (min)	**= 23.82**	**+**	**0.00**	**+**	**0.00**	**=**	**23.82**
Shallow Concentrated Flow							
Flow length (ft)	= 185.00		0.00		0.00		
Watercourse slope (%)	= 9.00		0.00		0.00		
Surface description	= Unpaved		Paved		Paved		
Average velocity (ft/s)	=4.84		0.00		0.00		
Travel Time (min)	**= 0.64**	**+**	**0.00**	**+**	**0.00**	**=**	**0.64**
Channel Flow							
X sectional flow area (sqft)	= 0.00		0.00		0.00		
Wetted perimeter (ft)	= 0.00		0.00		0.00		
Channel slope (%)	= 0.00		0.00		0.00		
Manning's n-value	= 0.015		0.015		0.015		
Velocity (ft/s)	=0.00						
			0.00				
					0.00		
Flow length (ft)	({0})0.0		0.0		0.0		
Travel Time (min)	**= 0.00**	**+**	**0.00**	**+**	**0.00**	**=**	**0.00**

Total Travel Time, Tc ..... 24.50 min

Hydrograph Report

Hydraflow Hydrographs Extension for Autodesk® Civil 3D® by Autodesk, Inc. v2020 Wednesday, 04 / 8 / 2020

Hyd. No. 4

MS

Hydrograph type	= SCS Runoff	Peak discharge	= 4.121 cfs
Storm frequency	= 25 yrs	Time to peak	= 11.97 hrs
Time interval	= 2 min	Hyd. volume	= 9,740 cuft
Drainage area	= 0.950 ac	Curve number	= 90
Basin Slope	= 0.0 %	Hydraulic length	= 0 ft
Tc method	= TR55	Time of conc. (Tc)	= 7.40 min
Total precip.	= 3.90 in	Distribution	= Type II
Storm duration	= 24 hrs	Shape factor	= 484

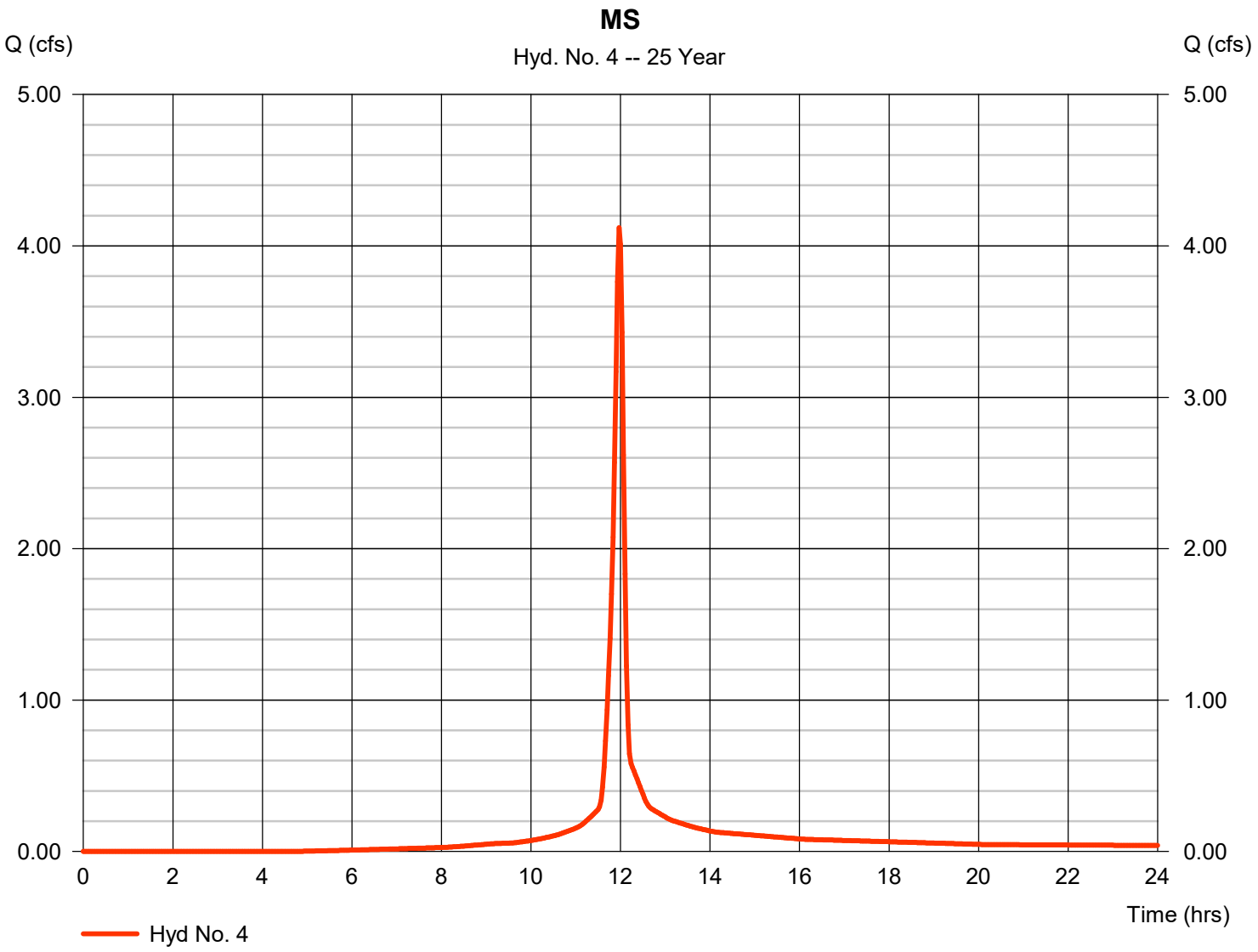

TR55 Tc Worksheet

Hydraflow Hydrographs Extension for Autodesk® Civil 3D® by Autodesk, Inc. v2020

Hyd. No. 4

MS

Description	A		B		C		Totals
Sheet Flow							
Manning's n-value	= 0.240		0.011		0.011		
Flow length (ft)	= 20.0		0.0		0.0		
Two-year 24-hr precip. (in)	= 2.00		0.00		0.00		
Land slope (%)	= 2.00		0.00		0.00		
Travel Time (min)	**= 4.98**	**+**	**0.00**	**+**	**0.00**	**=**	**4.98**
Shallow Concentrated Flow							
Flow length (ft)	= 300.00		0.00		0.00		
Watercourse slope (%)	= 1.00		0.00		0.00		
Surface description	= Paved		Paved		Paved		
Average velocity (ft/s)	=2.03		0.00		0.00		
Travel Time (min)	**= 2.46**	**+**	**0.00**	**+**	**0.00**	**=**	**2.46**
Channel Flow							
X sectional flow area (sqft)	= 0.00		0.00		0.00		
Wetted perimeter (ft)	= 0.00		0.00		0.00		
Channel slope (%)	= 0.00		0.00		0.00		
Manning's n-value	= 0.015		0.015		0.015		
Velocity (ft/s)	=0.00						
			0.00				
					0.00		
Flow length (ft)	({0})0.0		0.0		0.0		
Travel Time (min)	**= 0.00**	**+**	**0.00**	**+**	**0.00**	**=**	**0.00**

Total Travel Time, Tc ..... 7.40 min

Hydrograph Report

Hydraflow Hydrographs Extension for Autodesk® Civil 3D® by Autodesk, Inc. v2020 Wednesday, 04 / 8 / 2020

Hyd. No. 5

MN

Hydrograph type	= SCS Runoff	Peak discharge	= 3.167 cfs
Storm frequency	= 25 yrs	Time to peak	= 11.97 hrs
Time interval	= 2 min	Hyd. volume	= 7,485 cuft
Drainage area	= 0.730 ac	Curve number	= 90
Basin Slope	= 0.0 %	Hydraulic length	= 0 ft
Tc method	= TR55	Time of conc. (Tc)	= 9.30 min
Total precip.	= 3.90 in	Distribution	= Type II
Storm duration	= 24 hrs	Shape factor	= 484

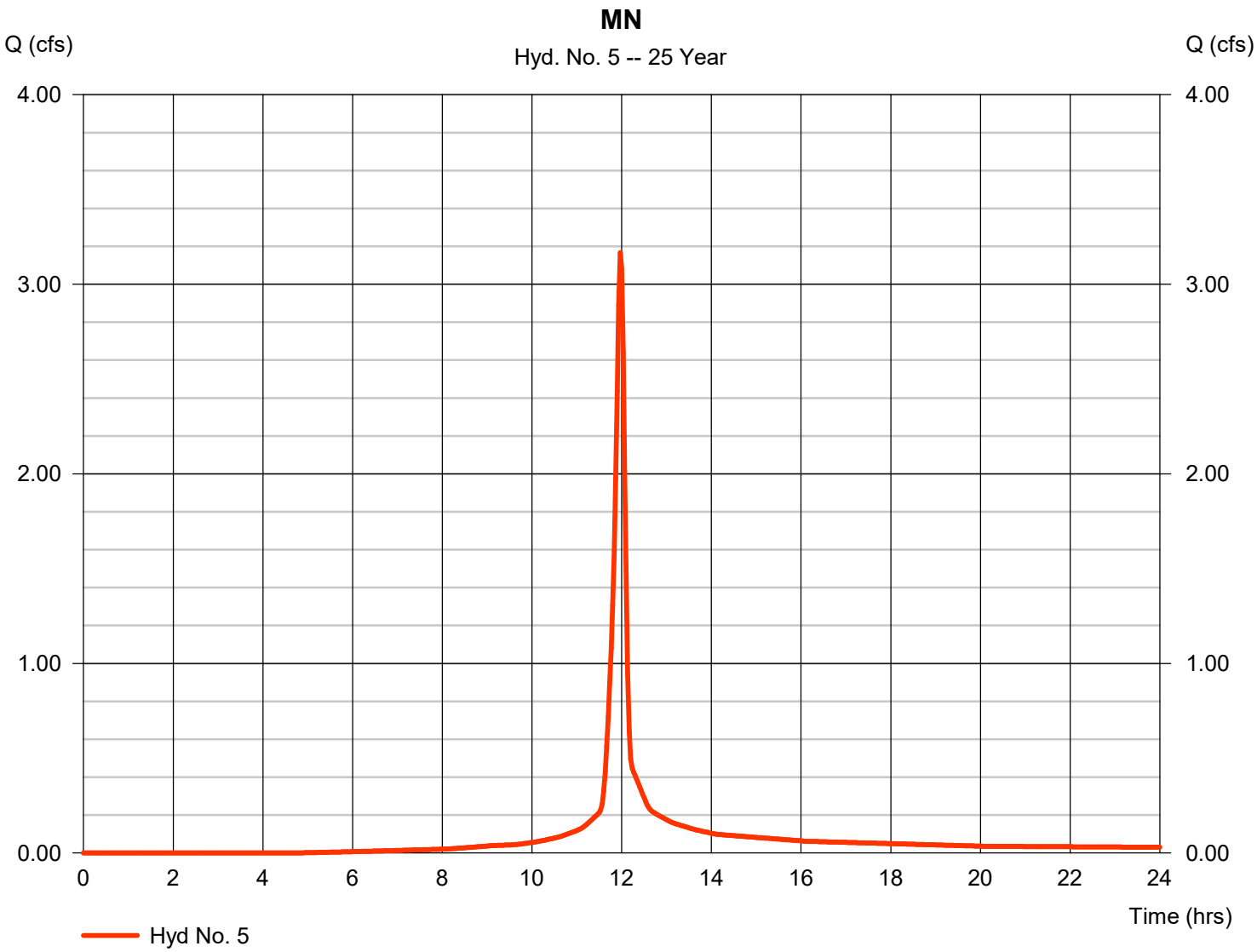

TR55 Tc Worksheet

Hydraflow Hydrographs Extension for Autodesk® Civil 3D® by Autodesk, Inc. v2020

Hyd. No. 5

MN

Description	A		B		C		Totals
Sheet Flow							
Manning's n-value	= 0.240		0.011		0.011		
Flow length (ft)	= 30.0		0.0		0.0		
Two-year 24-hr precip. (in)	= 2.00		0.00		0.00		
Land slope (%)	= 2.00		0.00		0.00		
Travel Time (min)	**= 6.89**	**+**	**0.00**	**+**	**0.00**	**=**	**6.89**
Shallow Concentrated Flow							
Flow length (ft)	= 300.00		0.00		0.00		
Watercourse slope (%)	= 1.00		0.00		0.00		
Surface description	= Paved		Paved		Paved		
Average velocity (ft/s)	=2.03		0.00		0.00		
Travel Time (min)	**= 2.46**	**+**	**0.00**	**+**	**0.00**	**=**	**2.46**
Channel Flow							
X sectional flow area (sqft)	= 0.00		0.00		0.00		
Wetted perimeter (ft)	= 0.00		0.00		0.00		
Channel slope (%)	= 0.00		0.00		0.00		
Manning's n-value	= 0.015		0.015		0.015		
Velocity (ft/s)	=0.00						
			0.00				
					0.00		
Flow length (ft)	({0})0.0		0.0		0.0		
Travel Time (min)	**= 0.00**	**+**	**0.00**	**+**	**0.00**	**=**	**0.00**

Total Travel Time, Tc ..... 9.30 min

Hydrograph Report

Hydraflow Hydrographs Extension for Autodesk® Civil 3D® by Autodesk, Inc. v2020 Wednesday, 04 / 8 / 2020

Hyd. No. 6

N

Hydrograph type	= SCS Runoff	Peak discharge	= 4.214 cfs
Storm frequency	= 25 yrs	Time to peak	= 12.00 hrs
Time interval	= 2 min	Hyd. volume	= 11,208 cuft
Drainage area	= 1.060 ac	Curve number	= 90
Basin Slope	= 0.0 %	Hydraulic length	= 0 ft
Tc method	= TR55	Time of conc. (Tc)	= 10.30 min
Total precip.	= 3.90 in	Distribution	= Type II
Storm duration	= 24 hrs	Shape factor	= 484

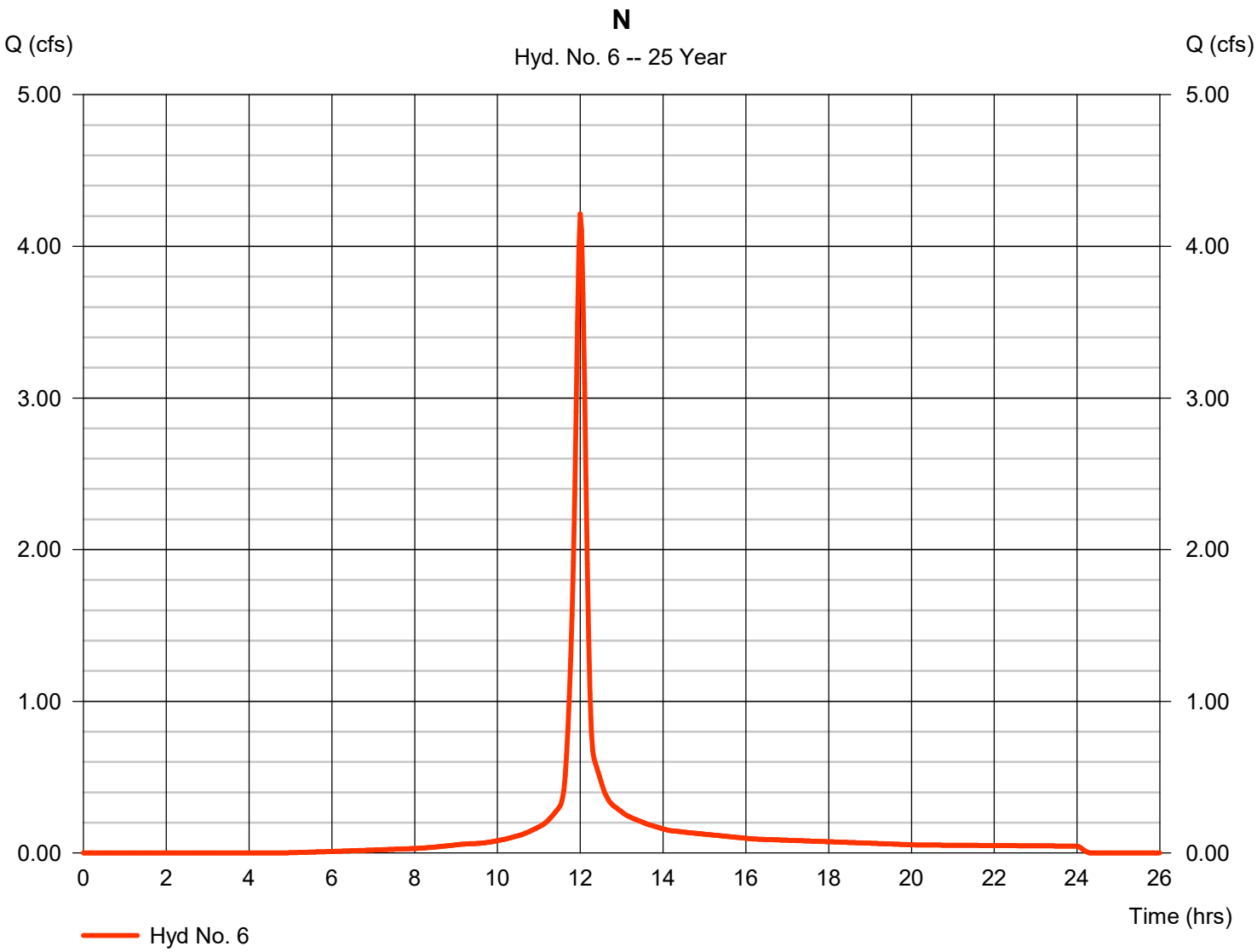

TR55 Tc Worksheet

Hydraflow Hydrographs Extension for Autodesk® Civil 3D® by Autodesk, Inc. v2020

Hyd. No. 6

N

Description	A		B		C		Totals
Sheet Flow							
Manning's n-value	= 0.240		0.011		0.011		
Flow length (ft)	= 50.0		0.0		0.0		
Two-year 24-hr precip. (in)	= 2.00		0.00		0.00		
Land slope (%)	= 5.00		0.00		0.00		
Travel Time (min)	**= 7.19**	**+**	**0.00**	**+**	**0.00**	**=**	**7.19**
Shallow Concentrated Flow							
Flow length (ft)	= 300.00		0.00		0.00		
Watercourse slope (%)	= 1.00		0.00		0.00		
Surface description	= Unpaved		Paved		Paved		
Average velocity (ft/s)	=1.61		0.00		0.00		
Travel Time (min)	**= 3.10**	**+**	**0.00**	**+**	**0.00**	**=**	**3.10**
Channel Flow							
X sectional flow area (sqft)	= 0.00		0.00		0.00		
Wetted perimeter (ft)	= 0.00		0.00		0.00		
Channel slope (%)	= 0.00		0.00		0.00		
Manning's n-value	= 0.015		0.015		0.015		
Velocity (ft/s)	=0.00						
			0.00				
					0.00		
Flow length (ft)	({0})0.0		0.0		0.0		
Travel Time (min)	**= 0.00**	**+**	**0.00**	**+**	**0.00**	**=**	**0.00**

Total Travel Time, Tc ..... 10.30 min

Hydrograph Report

Hydraflow Hydrographs Extension for Autodesk® Civil 3D® by Autodesk, Inc. v2020 Wednesday, 04 / 8 / 2020

Hyd. No. 7

Alley South

Hydrograph type	= Combine	Peak discharge	= 4.375 cfs
Storm frequency	= 25 yrs	Time to peak	= 11.97 hrs
Time interval	= 2 min	Hyd. volume	= 14,793 cuft
Inflow hyds.	= 2, 3	Contrib. drain. area	= 2.430 ac

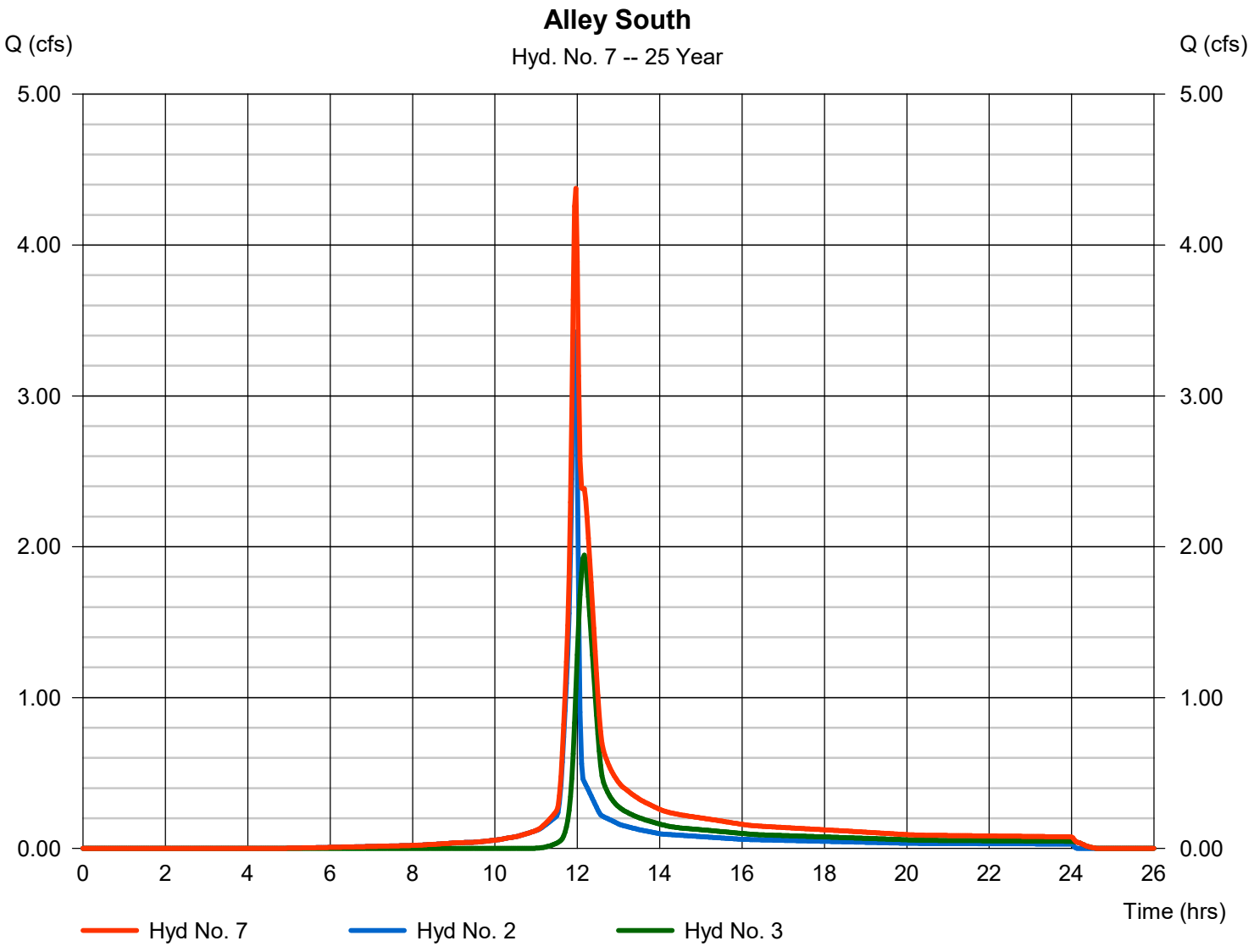

Hydrograph Report

Hydraflow Hydrographs Extension for Autodesk® Civil 3D® by Autodesk, Inc. v2020 Wednesday, 04 / 8 / 2020

Hyd. No. 8

Alley Mid

Hydrograph type	= Combine	Peak discharge	= 8.496 cfs
Storm frequency	= 25 yrs	Time to peak	= 11.97 hrs
Time interval	= 2 min	Hyd. volume	= 24,534 cuft
Inflow hyds.	= 4, 7	Contrib. drain. area	= 0.950 ac

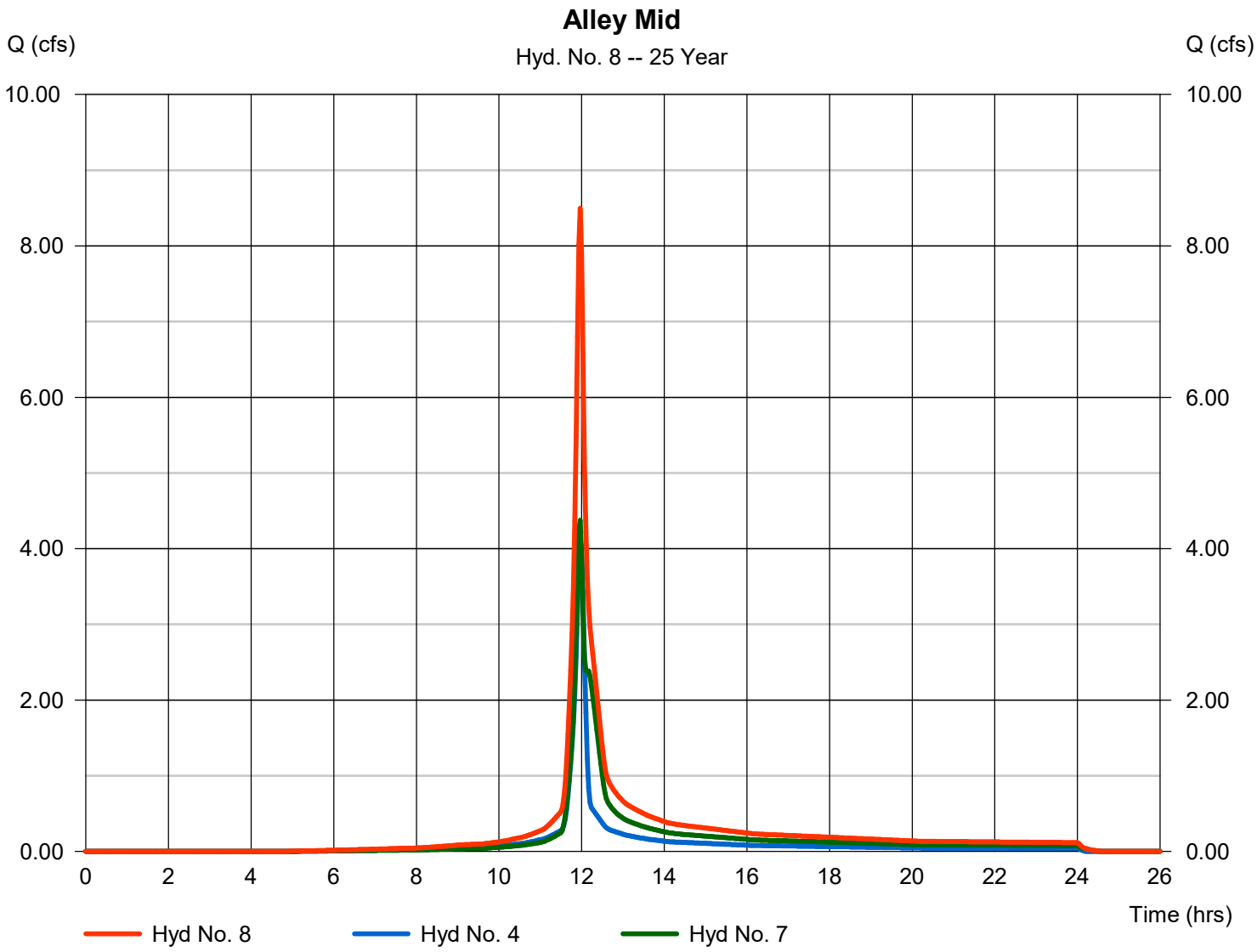

Hydrograph Report

Hydraflow Hydrographs Extension for Autodesk® Civil 3D® by Autodesk, Inc. v2020 Wednesday, 04 / 8 / 2020

Hyd. No. 9

Alley North

Hydrograph type	= Combine	Peak discharge	= 11.66 cfs
Storm frequency	= 25 yrs	Time to peak	= 11.97 hrs
Time interval	= 2 min	Hyd. volume	= 32,018 cuft
Inflow hyds.	= 5, 8	Contrib. drain. area	= 0.730 ac

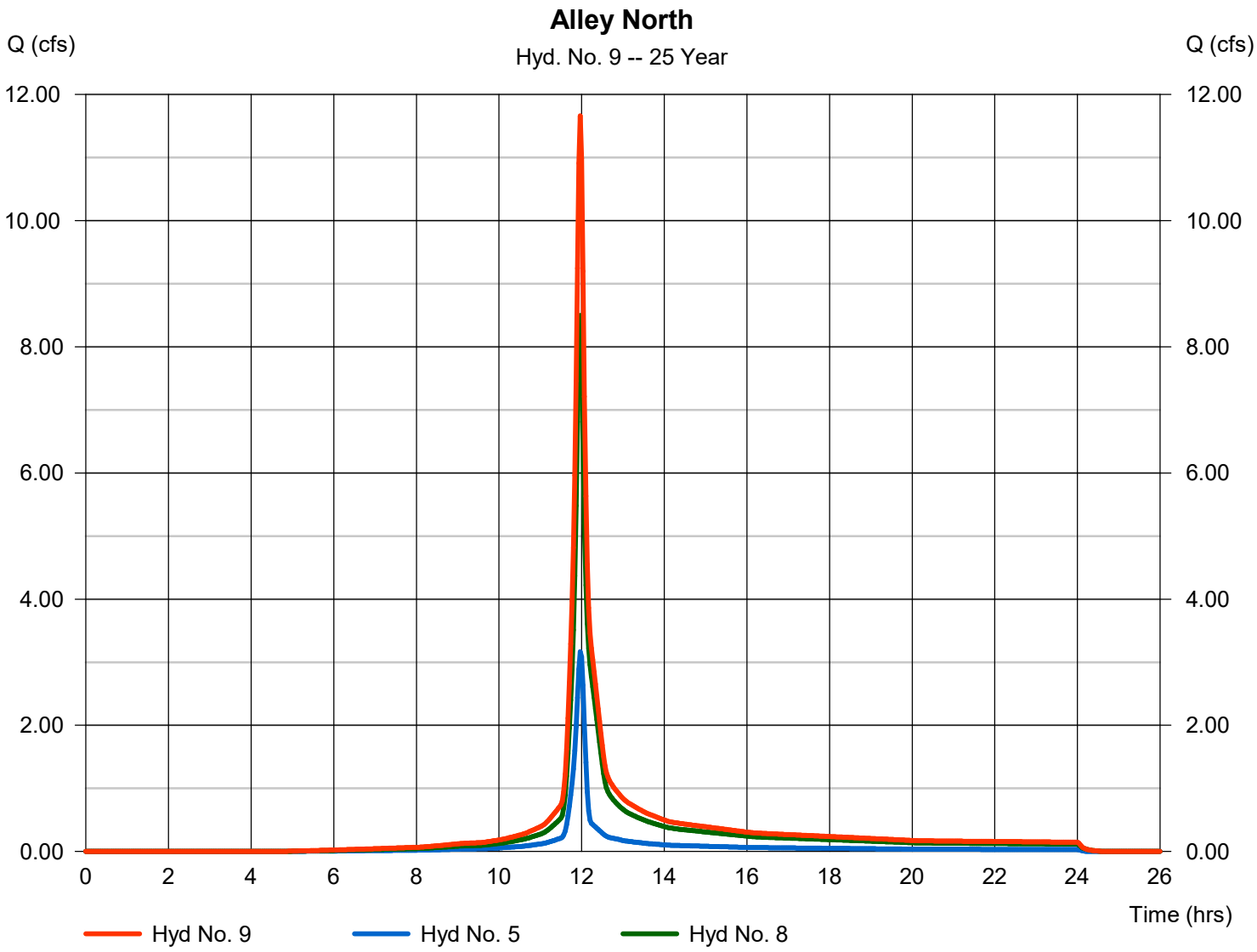

Hydrograph Report

Hydraflow Hydrographs Extension for Autodesk® Civil 3D® by Autodesk, Inc. v2020 Wednesday, 04 / 8 / 2020

Hyd. No. 10

Pond

Hydrograph type	= Combine	Peak discharge	= 15.64 cfs
Storm frequency	= 25 yrs	Time to peak	= 11.97 hrs
Time interval	= 2 min	Hyd. volume	= 43,226 cuft
Inflow hyds.	= 6, 9	Contrib. drain. area	= 1.060 ac

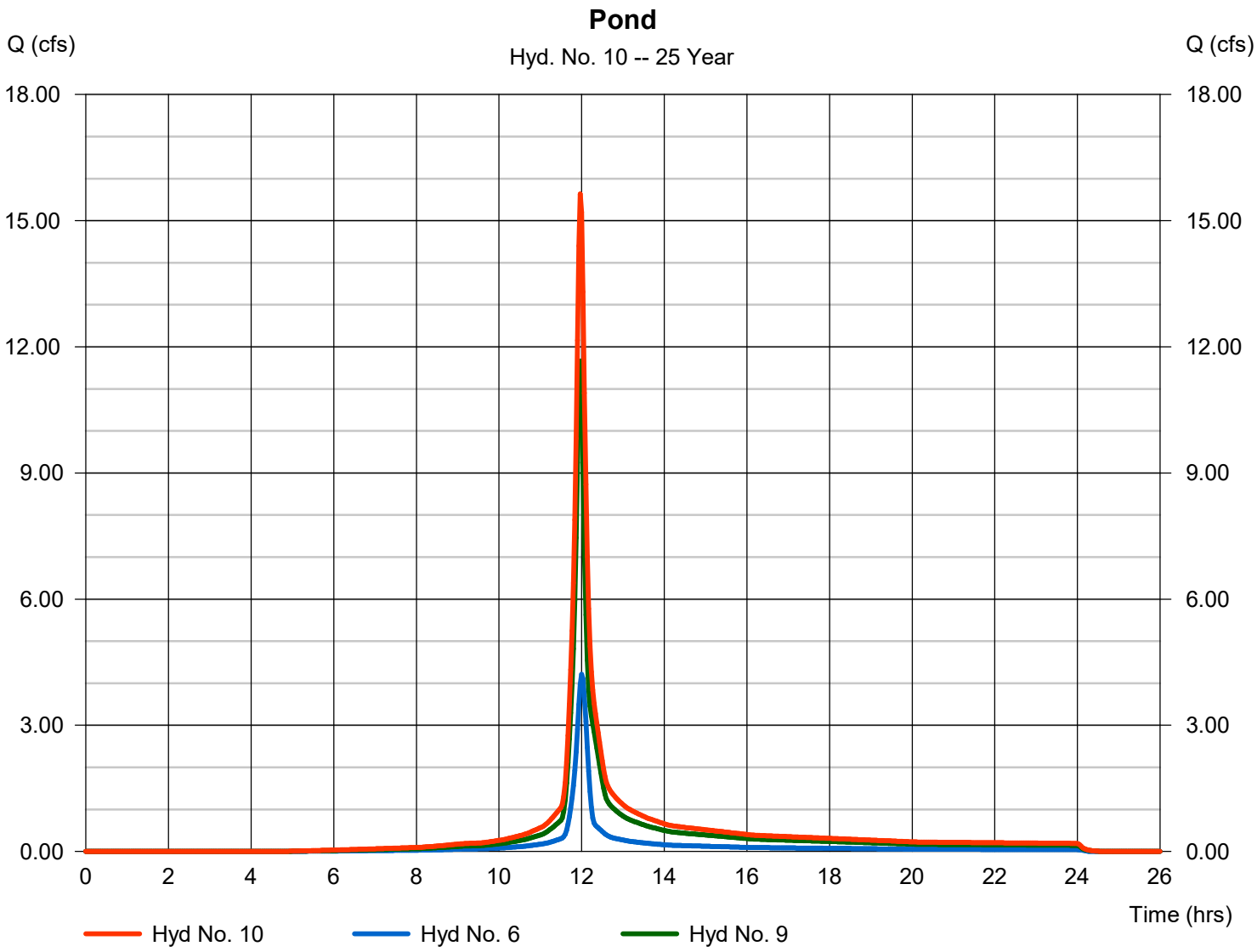

Hydrograph Report

Hydraflow Hydrographs Extension for Autodesk® Civil 3D® by Autodesk, Inc. v2020 Wednesday, 04 / 8 / 2020

Hyd. No. 11

Developed Dischardge

Hydrograph type	= Reservoir	Peak discharge	= 2.204 cfs
Storm frequency	= 25 yrs	Time to peak	= 12.50 hrs
Time interval	= 2 min	Hyd. volume	= 39,191 cuft
Inflow hyd. No.	= 10 - Pond	Max. Elevation	= 441.69 ft
Reservoir name	= 30th Street	Max. Storage	= 20,973 cuft

Storage Indication method used.

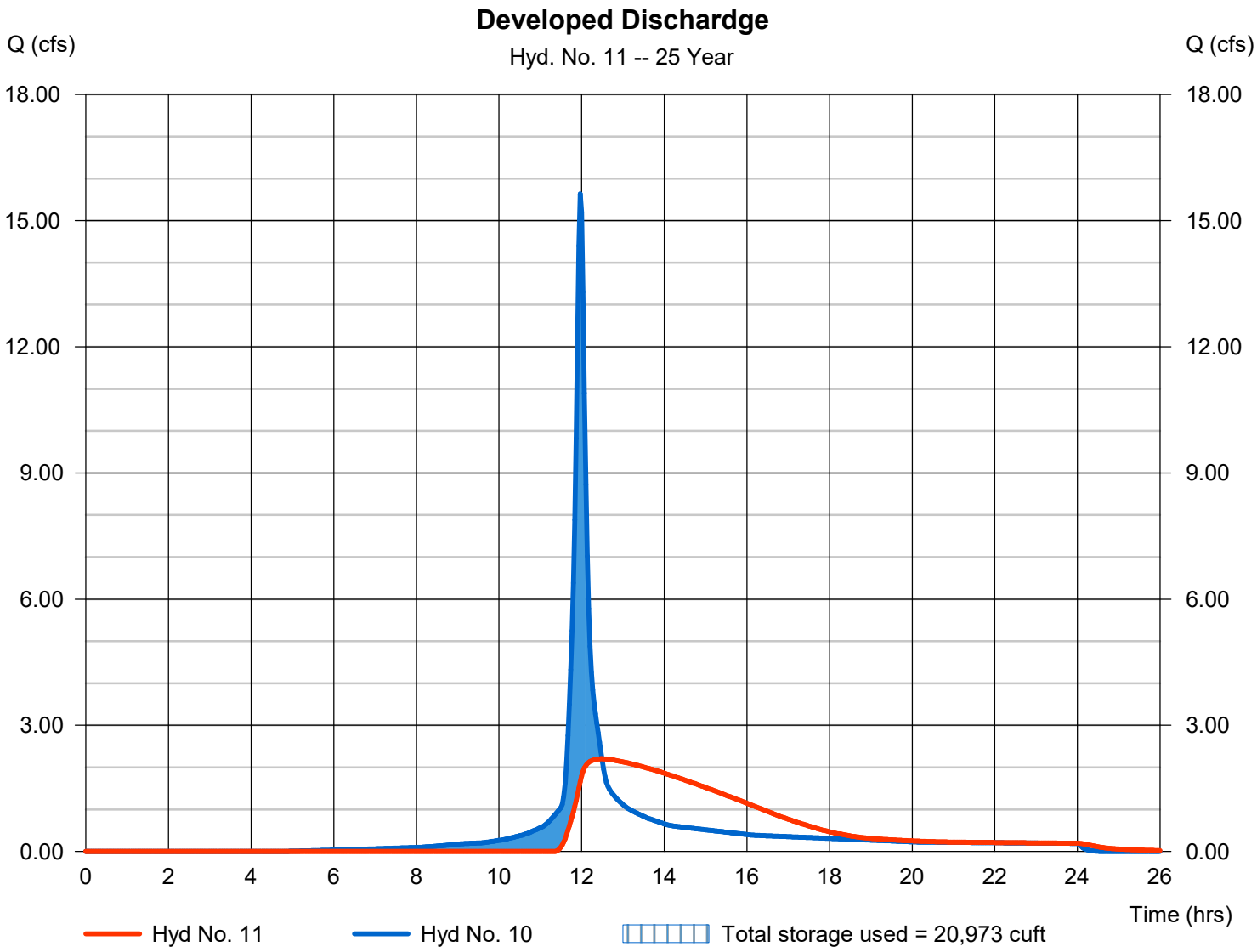

Pond Report

Hydraflow Hydrographs Extension for Autodesk® Civil 3D® by Autodesk, Inc. v2020 Wednesday, 04 / 8 / 2020

Pond No. 1 - 30th Street

Pond Data

Trapezoid -Bottom L x W = 90.0 x 20.0 ft, Side slope = 1.00:1, Bottom elev. = 434.00 ft, Depth = 9.00 ft

Stage / Storage Table

Stage (ft)	Elevation (ft)	Contour area (sqft)	Incr. Storage (cuft)	Total storage (cuft)
0.00	434.00	1,800	0	0
0.90	434.90	2,001	1,710	1,710
1.80	435.80	2,209	1,894	3,604
2.70	436.70	2,423	2,084	5,688
3.60	437.60	2,644	2,280	7,968
4.50	438.50	2,871	2,481	10,449
5.40	439.40	3,105	2,689	13,138
6.30	440.30	3,345	2,902	16,039
7.20	441.20	3,591	3,121	19,160
8.10	442.10	3,844	3,346	22,506
9.00	443.00	4,104	3,576	26,082

Culvert / Orifice Structures

	[A]	[B]	[C]	[PrfRsr]
Rise (in)	= 8.00	6.00	Inactive	0.00
Span (in)	= 8.00	6.00	2.00	0.00
No. Barrels	= 1	1	1	0
Invert El. (ft)	= 434.00	436.00	439.00	0.00
Length (ft)	= 8.00	0.00	0.00	0.00
Slope (%)	= 2.00	0.00	0.00	n/a
N-Value	= .013	.013	.013	n/a
Orifice Coeff.	= 0.60	0.60	0.60	0.60
Multi-Stage	= n/a	Yes	Yes	No

Weir Structures

	[A]	[B]	[C]	[D]
Crest Len (ft)	= 0.00	0.00	0.00	0.00
Crest El. (ft)	= 0.00	0.00	0.00	0.00
Weir Coeff.	= 3.33	3.33	3.33	3.33
Weir Type	= ---	---	---	---
Multi-Stage	= No	No	No	No

Exfil.(in/hr) = 0.000 (by Wet area)

TW Elev. (ft) = 0.00

Note: Culvert/Orifice outflows are analyzed under inlet (ic) and outlet (oc) control. Weir risers checked for orifice conditions (ic) and submergence (s).

Stage / Storage / Discharge Table

Stage ft	Storage cuft	Elevation ft	Clv A cfs	Clv B cfs	Clv C cfs	PrfRsr cfs	Wr A cfs	Wr B cfs	Wr C cfs	Wr D cfs	Exfil cfs	User cfs	Total cfs
0.00	0	434.00	0.00	0.00	0.00	---	---	---	---	---	---	---	0.000
0.90	1,710	434.90	0.00	0.00	0.00	---	---	---	---	---	---	---	0.000
1.80	3,604	435.80	0.00	0.00	0.00	---	---	---	---	---	---	---	0.000
2.70	5,688	436.70	0.63 ic	0.63 ic	0.00	---	---	---	---	---	---	---	0.634
3.60	7,968	437.60	1.10 oc	1.10 ic	0.00	---	---	---	---	---	---	---	1.098
4.50	10,449	438.50	1.42 ic	1.42 ic	0.00	---	---	---	---	---	---	---	1.418
5.40	13,138	439.40	1.68 ic	1.68 ic	0.00	---	---	---	---	---	---	---	1.678
6.30	16,039	440.30	1.90 ic	1.90 ic	0.00	---	---	---	---	---	---	---	1.902
7.20	19,160	441.20	2.10 ic	2.10 ic	0.00	---	---	---	---	---	---	---	2.103
8.10	22,506	442.10	2.29 ic	2.29 ic	0.00	---	---	---	---	---	---	---	2.286
9.00	26,082	443.00	2.43 ic	2.43 ic	0.00	---	---	---	---	---	---	---	2.425

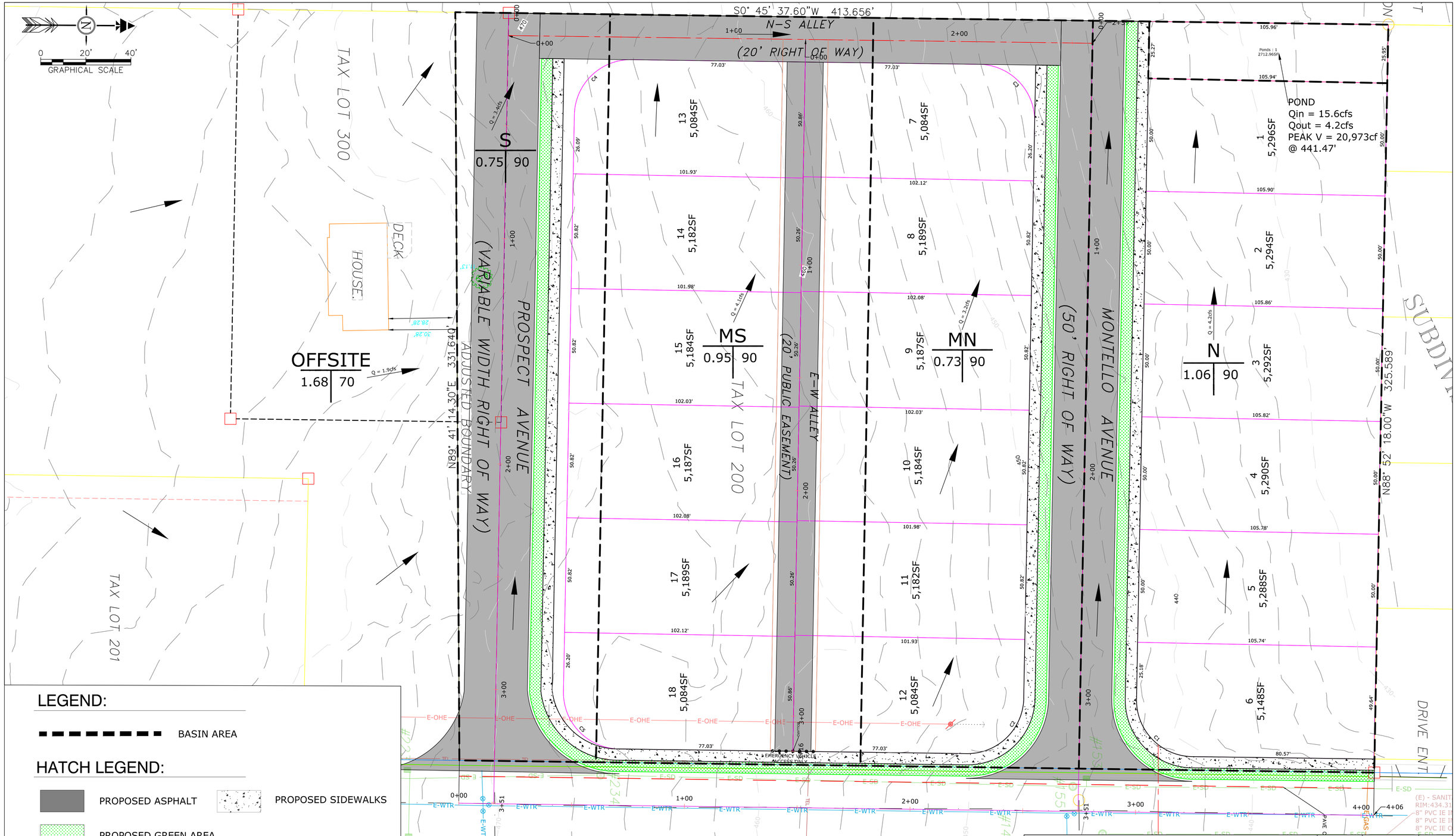

LEGEND:

BASIN AREA

HATCH LEGEND:

PROPOSED ASPHALT

PROPOSED SIDEWALKS

PROPOSED GREEN AREA

A
B | C

A= BASIN DESIGNATION
B= BASIN AREA
C= CURVE NUMBER

NOTE: ALL OTHERS AS NOTED ON PLAN

HRK ENGINEERING & FIELD SERVICES
489 N 8TH STREET - SUITE 201
HOOD RIVER, OREGON 97031
(541) 386-6480

	NAME	DATE
DESIGNED	KGM	03/31/20
DRAFTED	KGM	03/31/20
APPROVED	JTJ	03/31/20

30TH STREET SUBDIVISION
IBC CONSTRUCTION, INC.
3750 MAY DRIVE
HOOD RIVER, OR 97031
PN: 19-0XX

BASINS EXHIBIT

DRAWING NO.
1
OF 1

Gorge Tree Surgeon

Tyler Roth, ISA Certified Arborist PN-7469A

(541)399-7775

1311 15th St. Hood River, OR 97031

Oregon CCB 202052

Washington CAMBICL852C5

IBC Construction 30th Street Development Tree Inventory

The main trees in question are just west of the curb line along north south 30th Street. It is expected that these trees will be in the sidewalk development area. Only desirable trees have been included in this inventory. There are many "volunteer" cheery trees which were not included as they may be considered invasive.

Trees are measured at 4'6" above grade; this is an industry standard know as "DBH" or diameter at breast height. Trees were inventoried from south to north. If a tree has alphabetical assignments, this is due to a multi-stemmed growth habit. It is the same tree* but has branched out below 4'6".

Tree # 6 is the only tree not expected to be removed for sidewalk installation. This is the ONLY tree which should be prioritized for protection and retention.

Tree #		Species	Common name	Diameter: DBH
1		Quercus garryana	OR white Oak	11.8"
2A		Acer macrophyllum	Bid Leaf Maple	8.1"
2B				6.4"
2C				4.0"
3A		Quercus garryana	OR White Oak	8.5"
3B				6.5"
3C				7.9"
3D				7.7"
3E				3.7"
3F				7.0"
4		Quercus garryana	OR White Oak	6.9"
5		Quercus garryana	OR White Oak	4.0"
6		Pinus ponderosa	Ponderosa Pine	21.1"
7		Quercus garryana	OR White Oak	18.1"
8		Quercus garryana	OR White Oak	18.7"
9A		Quercus garryana	OR White Oak	4.2"
9B		Quercus garryana	OR White Oak	5.7"

9C		Quercus garryana	OR White Oak	2.0”
10A		Acer macrophullum	Big Leaf Maple	11.4”
10B		Acer macrophyllum	Big Leaf Maple	6.0”
10C		Acer macrophyllum	Big Leaf Maple	4.2”

30th St
Montello Ct
Montello Ct
10
30th St
9
8
30th St
7
6
5
4
3
2
Prospect Ave
Prospect Ave
30th St
1
30th St